Cybex R Series Arc Trainer

Service Manual



CYBEX®

Corporate Headquarters

Columbia Centre III, 9525 Bryn Mawr Avenue, Rosemont, Illinois 60018 • U.S.A.
847.288.3300 • FAX: 847.288.3703
Service phone number: 800.351.3737 (toll-free within U.S.A., Canada)
Global Website: www.cybexintl.com

International Offices

AMERICAS

North America

Cybex International Inc.

Columbia Centre III
9525 Bryn Mawr Avenue
Rosemont, IL 60018 U.S.A.
Telephone: (847) 288 3300
Service Email: customersupport@lifefitness.com
Sales/Marketing Email:
commercialsales@lifefitness.com

Brazil

Life Fitness Brasil

Av. Rebouças, 2315
Pinheiros
São Paulo, SP 05401-300
BRAZIL
SAC: 0800 773 8282 option 2
Telephone: +55 (11) 3095 5200 option 2
Service Email: suportebr@lifefitness.com
Sales/Marketing Email: vendasbr@lifefitness.com

Latin America and Caribbean*

Life Fitness, LLC

Columbia Centre III
9525 Bryn Mawr Avenue
Rosemont, IL 60018 U.S.A.
Telephone: (847) 288 3300
Service Email: customersupport@lifefitness.com
Sales/Marketing Email:
commercialsales@lifefitness.com

EUROPE, MIDDLE EAST, and AFRICA (EMEA)

Netherlands and Luxemburg

Life Fitness Atlantic BV

Bijdorpplein 25-31
2992 LB Barendrecht
THE NETHERLANDS
Telephone: (+31) 180 646 666
Service Email: service.benelux@lifefitness.com
Sales/Marketing Email:
marketing.benelux@lifefitness.com

United Kingdom

Life Fitness UK LTD

Queen Adelaide
Ely, Cambs, CB7 4UB
Telephone: General Office (+44) 1353.666017
Customer Support (+44) 1353.665507
Service Email: uk.support@lifefitness.com
Sales/Marketing Email: life@lifefitness.com

Germany, Austria, and Switzerland

Life Fitness Europe GMBH

Neuhofweg 9
85716 Unterschleißheim
GERMANY
Telephone:
+49 (0) 89 / 31775166 Germany
+43 (0) 1 / 6157198 Austria
+41 (0) 848 / 000901 Switzerland
Service Email: kundendienst@lifefitness.com
Sales/Marketing Email: vertrieb@lifefitness.com

Spain

Life Fitness IBERIA

C/Frederic Mompou 5,1º1ª
08960 Sant Just Desvern Barcelona
SPAIN
Telephone: (+34) 93.672.4660
Service Email: servicio.tecnico@lifefitness.com
Sales/Marketing Email: info.iberia@lifefitness.com

Belgium

Life Fitness Benelux NV

Parc Industrial de Petit-Rechain
4800 Verviers
BELGIUM
Telephone: (+32) 87 300 942
Service Email: service.benelux@lifefitness.com
Sales/Marketing Email:
marketing.benelux@lifefitness.com

All Other EMEA Countries and Distributor Business EMEA*

Bijdorpplein 25-31
2992 LB Barendrecht
THE NETHERLANDS
Telephone: (+31) 180 646 644
Service Email: EMEAServiceSupport@lifefitness.com

ASIA PACIFIC (AP)

Japan

Life Fitness Japan, Ltd

4-17-33 Minami Aoyama 1F/B1F
Minato-ku - Tokyo 107-0062
Japan
Telephone: (+81) 0120.114.482
Fax: (+81) 03-5770-5059
Service Email: service.lfj@lifefitness.com
Sales/Marketing Email: sales@lifefitnessjapan.com

Hong Kong

Life Fitness Asia Pacific LTD

32/F, Global Trade Square
21 Wong Chuk Hang Road
Hong Kong
Telephone: (+852) 2575.6262
Service Email: Service.HK@lifefitness.com
Sales/Marketing Email: hongkong.sales@lifefitness.com

All Other Asia Pacific countries and distributor business Asia Pacific*

32/F, Global Trade Square
21 Wong Chuk Hang Road
Hong Kong
Telephone: (+852) 2575.6262
Fax: (+852) 2575.6894
Service Email: Service.AP@lifefitness.com
Sales/Marketing Email:
Marketing.HK.Asia@lifefitness.com

*Also check www.cybexintl.com for local representation or distributor/dealer

User and Service Documents Link

https://lfworld.lifefitness.com

Additional information is available online using the link above.

تتوفر معلومات إضافية على الإنترنت باستخدام الرابط أعلاه.

点击上面的链接可在线获取更多信息。

Flere oplysninger er tilgængelige online gennem linket ovenfor.

Bijkomende informatie is online beschikbaar via bovenstaande link.

Vous trouverez plus d'informations en ligne à l'aide du lien ci-dessus.

Zusätzliche Informationen finden Sie online über den oben angegebenen Link.

Ulteriori informazioni sono disponibili online utilizzando il link sopra riportato.

追加情報は上記リンクを使用してオンラインで利用可能です。

상기 링크를 통해 온라인에서 추가 정보를 볼 수 있습니다.

Informações adicionais estão disponíveis on-line, através do link acima.

Дополнительная информация доступна в интернете по ссылке, указанной выше.

Mediante el enlace anterior podrá acceder a información adicional en línea.

Ytterligare information finns online genom att använda länken ovan.

İnternet üzerinden daha fazla bilgi edinmek için yukarıdaki bağlantıyı kullanabilirsiniz.

هناك معلومات إضافية متاحة على الإنترنت باستخدام الرابط أعلاه.

Informazio osagarria eskuragarri dago goiko estekaren bidez.

Допълнителна информация можете да намерите онлайн, като използвате връзката по-горе.

Mitjançant l'enllaç anterior podreu accedir a informació addicional en línia.

使用上面的連結線上提供額外資訊。

Dodatne informacije možete pronaći na internetu sljedeći vezu iznad.

ከላይ የተቀመጠውን አገናኝ(ሊንክ) በመጠቀም መረጃዎች አንላይን ያገኛሉ።

Lisätietoja on saatavissa verkosta käyttämällä yllä olevaa linkkiä.

Wubetumi anya nsɛm afoforo aka ho wɔ wɛbsait so denam asɛm a ɛwɔ atifi hɔ a wubemia so so.

Πρόσθετες πληροφορίες είναι διαθέσιμες ονλάιν χρησιμοποιώντας το σύνδεσμο παραπάνω.

מידע נוסף אפשר לקבל באינטרנט באמצעות הקישור לעיל.

További információ elérhető online, a fenti hivatkozás segítségével.

Viðbótarupplýsingar eru fáanlegar á netinu með því að smella á tengilinn hér fyrir ofan.

Plus indicium per superum situm potes invenire.

മുകളിലുള്ള ലിങ്ക് ഉപയോഗിച്ച് ഓൺലൈനിൽ കൂടുതല് വിവരങ്ങൾ ലഭ്യമാണ്.

Ytterligere informasjon er tilgjengelig på nettet via linken ovenfor.

Dodatkowe informacje są dostępne online pod powyższym odnośnikiem.

Informações adicionais estão disponíveis online a usar o link acima.

Informaţii suplimentare sunt disponibile online, utilizând link-ul de mai sus.

Dodatne informacije dostupne su na mreži putem gornjeg linka.

Ďalšie informácie sú dostupné online na vyššie uvedenom odkaze.

Table of Contents

Safety
Safety Instructions.... 4

Introduction
Using this Manual.... 6
Customer Support Contact Information.... 6
Online References.... 6
Related Products.... 6

Maintenance
Preventive Maintenance Tips.... 7
Approved and Compatible Cleaners.... 7
Maintenance Schedule.... 7
Drive Belts.... 8

Theory of Operation
Overview.... 10
Battery.... 10
Belts.... 10
Console.... 10
Incline.... 10
Pulleys.... 10
Resistance Control Board (RCB).... 10

How To's
Knowledge Base.... 11
Brake Generator Assembly.... 11
Contact Heart Rate Grips - Lower Body.... 18
Contact Heart Rate Grips - Total Body.... 21
Display Cable.... 24
Handle Assembly.... 29
Linkage Rods.... 32
Primary Drive Belt.... 34
Pulley and Crank Shaft.... 41
Front Foot Plate Arm.... 49
Rear Foot Plate Arm.... 57

Troubleshooting
Knowledge Base.... 65
Troubleshooting the Polar® Heart Rate Chest Strap.... 65
Troubleshooting the Lifepulse™ System Sensors.... 65

Software
Refer to Console Service Manual.... 66

Diagnostics
Refer to Console Service Manual.... 67

Error code list
Refer to Console Service Manual.... 68

Network Information
Refer to Console Service Manual.... 69

Schematics
Online References.... 70
Advanced Schematic.... 71
Basic Schematic.... 72

LED Chart
Resistance Control Board LED's.... 73

Glossary
Connectors.... 74
Heart Rate Sensor / HR Sensor.... 74
LED.... 74
Levelers.... 74
Lifepulse™.... 74
Polar Receiver.... 74
RCB.... 74

Warranty
What is Covered.... 75
Who is Covered.... 75
How Long It is Covered.... 75
Who Pays Transportation and Insurance For Service.... 75
What We Will Do To Correct Covered Defects.... 75
What is Not Covered.... 75
What You Must Do.... 75
How to Get Parts and Service.... 75
Exclusive Warranty.... 75
Changes in Warranty Not Authorized.... 76
Effects of State Laws.... 76
Warranty Information.... 76

© Copyright 2020, Life Fitness, LLC. All Rights Reserved. Life Fitness, Hammer Strength, Cybex, ICG and SCIFIT are registered trademarks of Life Fitness, LLC and its affiliated companies and subsidiaries. Brunswick and related trademarks used under license from Brunswick Corporation. Disclaimer: Images and specifications are current as of the date of publication and are subject to change.
Columbia Center III - 9525 Bryn Mawr Ave, Rosemont, IL 60018 • 800-351-3737 • 847-288-3700 • FAX 800-216-8893
www.cybexintl.com • 2020

Safety Instructions

Read all instructions before use.

Please take special note of the following safety instructions and important points prior to choosing a location and beginning assembly of the product.

WARNING: Health-related injuries may result from incorrect or excessive use of exercise equipment. Life Fitness STRONGLY recommends seeing a physician for a complete medical exam before undertaking an exercise program, particularly if the user has a family history of high blood pressure or heart disease, is over the age of 45, smokes, has high cholesterol, is obese, or has not exercised regularly in the past year. If, at any time while exercising, the user experiences faintness, dizziness, pain, or shortness of breath, he or she must stop immediately.

WARNING: To reduce the risk of burns, fire, electric shock, or injury, it is imperative to connect each product to a properly grounded electrical outlet.

WARNING: Heart rate monitoring systems may be inaccurate. Over exercising may result in serious injury or death. If you feel faint, stop exercising immediately.

WARNING: Ensure that there is at least 23.6" (0.6 m) of clearance behind the product and at least 12" (30 cm) on the sides.

WARNING: The product is not equipped with a free-wheeling feature. Therefore, it cannot be stopped immediately.

WARNING: Moving parts and fall hazard.

- To avoid serious injury wait until foot plates come to a complete stop before getting off unit.
- The moving parts cannot be stopped immediately, the unit is not equipped with a free wheel.

WARNING: This product can expose you to chemicals including Di-2-ethylhexyl-phthalate, which is known to the State of California to cause cancer and birth defects or other reproductive harm. For more information go to http://www.P65Warnings.ca.gov

DANGER: To reduce the risk of electrical shock or injury from moving parts, always unplug product before cleaning or attempting any maintenance activity.


Keep all body parts, loose clothing, shoelaces, and towels away from moving parts.

- The individual human power required to perform an exercise may be different than the mechanical power displayed on the product.
- Use caution when mounting or dismounting the product. Before mounting, use the moving arms to bring the foot plate nearest to you to the lowest position. Use the stationary handlebars whenever additional stability is required. While exercising, hold onto the moving arms.
- Never face backward while using the product.
- Do not stand or sit on the rear plastic covers of the product.
- Never operate the product if it has a damaged power cord or electrical plug, or if it has been dropped, damaged, or even partially immersed in water. Contact Customer Support Services.
- Position the product so that the power cord plug to the wall is accessible to the user. Make sure that the power cord is not knotted or twisted and that it is not trapped under any equipment or other objects.
- If the electrical supply cord is damaged, it must be replaced by the manufacturer, an authorized service agent, or a similarly qualified person to avoid a hazard.
- Always follow the console instructions for proper operation.
- This appliance is not intended for use by persons (including children) with reduced physical, sensory, or mental capabilities, or lack of experience or knowledge unless they have supervision or been given instruction concerning the use of the appliance by a person responsible for their safety.
- This equipment is not intended for use by children. Keep children under the age of 14 away from the machine.
- Do not use this product outdoors, near swimming pools or in areas of high humidity.
- Never operate the product with the air openings blocked. Keep air openings free of lint, hair, or any other obstructing material.
- Never insert objects into any opening in these products. If an object should drop inside, turn off the power, unplug the power cord from the outlet, and carefully retrieve it. If the item cannot be reached, contact Customer Support Services.
- Never place liquids of any type directly on the unit, except in an accessory tray or holder. Containers with lids are recommended.

- Do not use these products in bare feet. Always wear shoes. Wear shoes with rubber or high-traction soles. Do not use shoes with heels, leather soles, cleats or spikes. Make sure no stones are embedded in the soles.
- Do not reach into, or underneath, the unit or tip it on its side during operation.
- Do not allow other people to interfere in any way with the user or equipment during a workout.
- Allow LCD consoles to “normalize” with respect to temperature for one hour before plugging the unit in and using.
- Use these products for their intended use as described in this manual. Do not use attachments that have not been recommended by the manufacturer.
- Read all warnings on each product prior to starting a workout.
- If warnings are missing or damaged, please contact Customer Support Services immediately for replacement warning labels. Warning labels are shipped with every product and should be installed before product is used. Life Fitness is not responsible for missing or damaged warning labels.

NOTE: This equipment has been tested and found to comply with the limits for a Class A digital device, pursuant to part 15 of the FCC rules. These limits are designed to provide reasonable protection against harmful interference when the equipment is operated in a commercial environment. This equipment generates, uses and can radiate radio frequency energy, and if not installed and used in accordance with the instruction manual, may cause harmful interference to radio communications. Operation of this equipment in a residential area is likely to cause harmful interference in which case the user will be required to correct the interference at his own expense.

SAVE THESE INSTRUCTIONS FOR FUTURE REFERENCE.

Testing Parameters

Displayed power (Wattage) and speed (Strides Per Minute), were found to meet class A accuracy when compared with measured power and speed, with adjustable braking positioned in its maximum position, at the following accuracy test points:

- 25 W, 37 SPM
- 50 W, 52 SPM
- 100 W, 72 SPM
- 150 W, 86 SPM
- 175 W, 92 SPM
- 200 W, 97 SPM

Introduction

Using this Manual

Descriptions using the words "left" and "right" refer to the orientation of a user using the product, facing the console. "Front" is the area of the product with the console. The "Rear" of the product is behind the user.

Customer Support Contact Information

Refer to Corporate Headquarters for contact info.

To speed Customer Support Service's response, please provide the following information to the customer support technician:

- Serial number
- Model number
- Part name
- Part number
- Symptom of problem

Serial Number Location

The serial number decal is located on the lower crossbar.

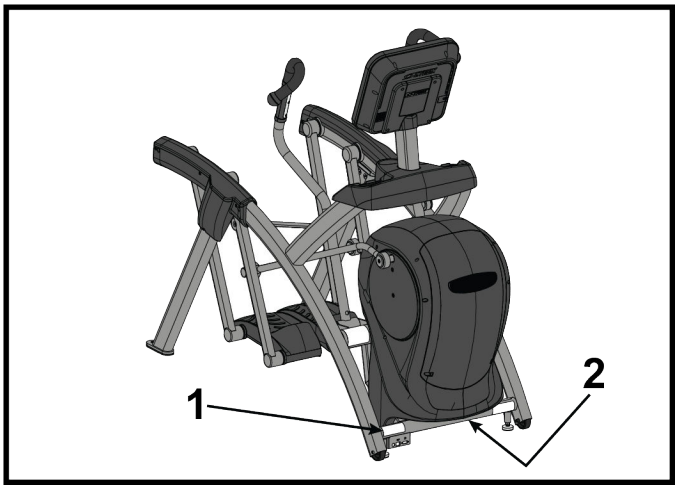

Item	Description
1	Serial number decal
2	Lower crossbar

Online References

Detailed Schematics are available online in Parts Manuals:

- https://www.lftechsupport.com access technical documentation and part manuals for Life Fitness, Hammer Strength, and ICG.
- http://www.lifefitness.com/parts service parts ordering for Life Fitness, Cybex, SCIFIT, Hammer Strength, and ICG products along with warranty parts ordering and technician requests.
- https://lfworld.lifefitness.com easy to find Knowledge Base articles with answers to frequently asked questions and product support documentation for Life Fitness, Cybex, SCIFIT, Hammer Strength, and ICG.

Related Products

The *R-Series Arc Trainer* uses the following consoles:

- Cybex 50L console
- Cybex 70T console

Preventive Maintenance Tips

CYBEX products are backed by the engineering excellence and reliability of *CYBEX* and are one of the most rugged and trouble-free pieces of exercise equipment on the market today.

NOTE: Safety of the equipment can be maintained only if the equipment is examined regularly for damage or wear. Keep the equipment out of use until defective parts are repaired or replaced. Pay special attention to parts that are subject to wear, as outlined below.

The following preventive maintenance tips will keep the *CYBEX* product operating at peak performance:

- Locate the product in a cool, dry place.
- Clean the display console and all exterior surfaces with an approved or compatible cleaner (see *CYBEX* Approved Cleaners) and a microfiber cloth.
- Long fingernails may damage or scratch the surface of the console; use the pad of the finger to press the selection buttons on the console.
- Clean the top surface of the foot plates regularly.
- Clean the housing and moving arms thoroughly on a regular basis.

Approved and Compatible Cleaners

Two preferred cleaners have been approved by reliability experts: PureGreen 24 and Gym Wipes. Both cleaners will safely and effectively remove dirt, grime and sweat from equipment. PureGreen 24 and the Antibacterial Force formula of Gym Wipes are both disinfectants that are effective against MRSA and H1N1.

PureGreen 24 is available in a spray which is convenient for gym staff to use. Apply the spray to a microfiber cloth and wipe down the equipment. Use PureGreen 24 on the equipment for at least 2 minutes for general disinfection purposes and at least 10 minutes for fungus and viral control.

Gym Wipes are large, durable pre-moistened wipes to use on the equipment before and after workouts. Use Gym Wipes on the equipment for at least 2 minutes for general disinfection purposes.

Contact Customer Support Services to order these cleaners (1-800-351-3737 or email: customersupport@lifefitness.com).

Mild soap and water or a mild non-abrasive household cleaner can also be used to clean the display and all exterior surfaces. Use a soft microfiber cloth only. Apply the cleaner to the microfiber cloth before cleaning. DO NOT use ammonia or acid based cleaners. DO NOT use abrasive cleaners. DO NOT use paper towels. DO NOT apply cleaners directly to the equipment surfaces.

Maintenance Schedule

Item	Weekly	Monthly	Annually
Console Overlays	Clean		Inspect
Bottle Holders / Accessory Trays	Clean	Inspect	
Console Mounting Bolts			Inspect
Drive Belts			Inspect
Hardware			Inspect
Frames	Clean		Inspect
Plastic Covers	Clean	Inspect	Inspect
Lifepulse Sensors	Clean / Inspect		
Foot Plates	Clean	Inspect	
Leg Levelers		Inspect / Adjust	

Remove Front Access Cover

1. Remove screws securing front access cover using a Phillips screwdriver.

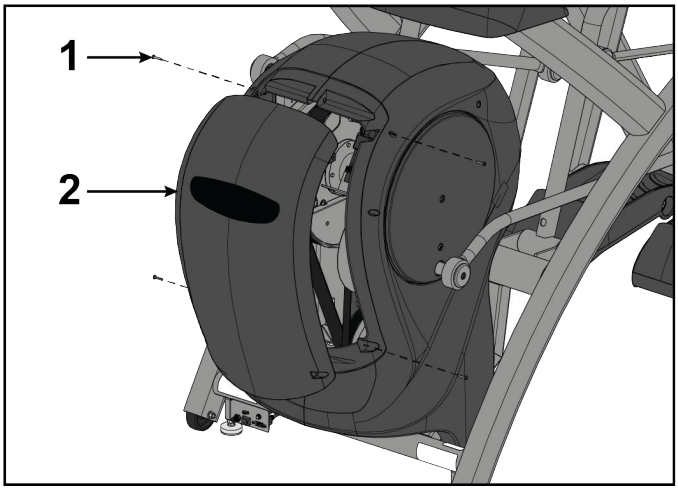

	Description	Qty.
1	Screw	4
2	Front Access Cover	1

2. Remove access cover.

WARNING: Burn hazard.

Do not touch flywheel until cool.

Inspect Drive Belts

There are two drive belts that may become loose, worn or cracked.

Unless the belts have been removed and not replaced properly, it is unlikely the belts will come loose or need to be re-tensioned.

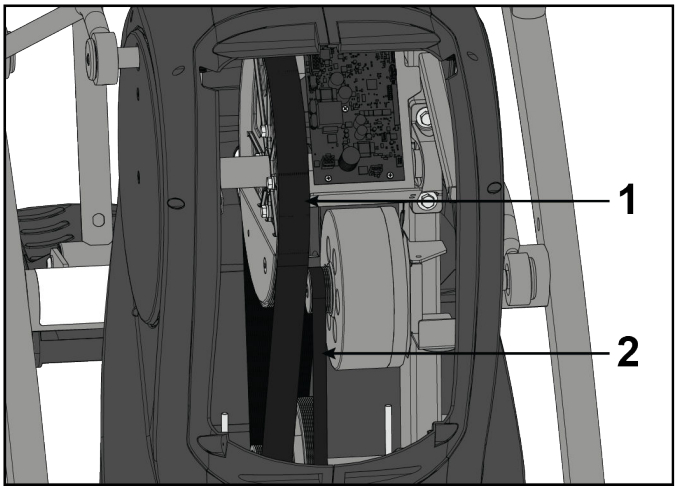

Item	Description	Qty.
1	Primary Drive Belt	1
2	Secondary Drive Belt	1

If a belt has cracks or appears worn, it must be replaced immediately by a qualified service technician.

Primary Belt

The wider of the two belts. It has grooves that keep it aligned on the large upper pulley.

Secondary Belt

The narrower of the two belts. It has grooves that keep it aligned on the flywheel's drive pulley.

Install Access Cover

CAUTION: Do not over tighten screws.

1. Replace and tighten the two upper screws using a Phillips screwdriver.

2. Replace and tighten the two lower screws using a Phillips screwdriver.
3. Test unit for proper operation.

Theory of Operation

Overview

The drive system is a dual stage drive system. The articulating handles, if equipped, connect to the front foot plate arms via linkage rods. The front foot plate arms connect to crank arms via linkage rods. Fore-aft movement of the handles and footplates cause the crankshaft to rotate as a result of crank arm movement.

The primary drive pulley is located on the crank shaft and drives a pulley on the lower pulley shaft via the primary drive belt. A second pulley on the lower pulley shaft transmits rotational power to the brake / generator via the secondary drive belt.

The brake / generator serves two functions:

- The rotating generator provides power to the Arc Trainer
- The brake provides resistance to the user's motion

Some Arc Trainers are self-powered, in other words generator powered, but do have an optional 12 VDC power supply for low or infrequent use environments. All Arc Trainers have an internal 12 VDC battery that charges during use to provide extra power for the incline system. Arc Trainers with higher console power needs require an external 24 VDC power supply to augment the Arc Trainer's generator power.

Battery

The unit is designed with a 12 volt Lead-Acid rechargeable battery. The battery will recharge during regular operation of unit or when the optional power adapter is plugged in. The display will indicate dashes in the incline display if the battery fails to provide enough energy. The unit will still function normally other than the disabling of the incline feature. If the battery is completely discharged, the workout review will also be truncated if the user is not striding during the time period.

Belts

The belts are the means by which the rotational force in each of the pulleys is transferred. Both of the belts are poly-v drive belts which, when put in tension on the pulleys, provide a connection for the pulleys and component that receives their rotational force.

Console

The console tracks the time, distance traveled, level of resistance, level of incline, and speed of the Arc Trainer when it is in use. The watt output is also calculated based on the resistance level manually set by the user. The heart rate will also appear if the user is wearing a heart rate detecting device or gripping the Lifepulse™ grips.

Incline

In addition to resistance to motion provided by the brake / generator, the Arc Trainer has an incline motor that allows the user to adjust between Glide, Stride, and Climb settings to adjust intensity and target muscle groups being worked. The Arc Trainer's battery is essential for proper incline function. The default setting for an Arc Trainer at rest is incline setting 6. Setting 6 is the transition point between Glide and Stride, decreasing the value lessens the Glide intensity, increasing the value transitions the Arc Trainer into the Stride region and eventually the Climb region of operation.

Pulleys

The pulleys are mounted to the crank shaft connected to the frame via pillow blocks and the lower pulley shaft bolted to the frame. All pulleys reside inside the front shrouding. As the user moves the foot plates and handles, Crank arms which are connected to the front foot plate arms, pivot around at its connection to the Crankshaft. The Crank Pulley rotates due to the rotational force supplied to it from the Crankshaft. The rotational force from the Crank Pulley is transferred to the smaller Intermediate Pulley. This reduction in size results in an increase in rotations for the Intermediate Pulley which is important for the brake / generator.

Resistance Control Board (RCB)

The RCB contains the Arc Trainer's fundamental electronics and resides inside the front shrouding behind a metal cover. The RCB inputs power from the generator and / or attached power supply and converts it to voltages needed to run the electronics, apply braking force and operate the incline motor. Additionally, the RCB tracks user's exercising speed by interpreting speed from the generator output. The RCB bidirectionally communicates with the display to accept user settings and to feed the display with usage information such as expended calories.

Knowledge Base

See Knowledge Base for more detailed information.

Brake Generator Assembly

Tools Required:

- 3/16” Allen wrench
- 5/16" Allen wrench
- Phillips screwdriver
- Long Phillips screwdriver
- 1/2” Socket wrench
- 9/16” Socket wrench
- Loctite® #242, Blue
- Loctite® #271, Red
- Straight edge
- Torque wrench
- Clean cloth (2)

Disconnect power source

Unplug power cord from power outlet.

WARNING: Shock and electrocution hazard.

- Unplug unit and let sit 10 minutes before cleaning or performing maintenance.
- Electrical charge can remain in unit after unplugging.
- Keep water and liquids away from electrical parts.

Remove front access cover

1. Remove screws securing front access cover using a Phillips screwdriver.

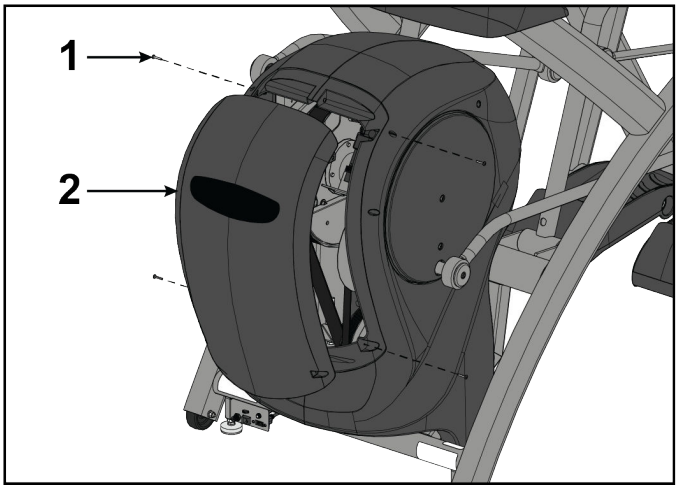

Item	Description	Qty.
1	Screw	4
2	Front access cover	1

2. Remove access cover.

WARNING: Burn hazard.

Do not touch flywheel until cool.

Remove linkage rods

1. Remove socket head cap screw (SHCS), flat washer, cap and spacer securing linkage rod using a 3/16” Allen wrench.

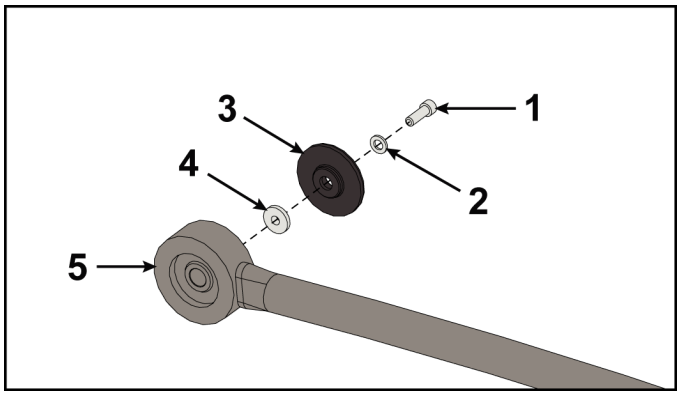

Item	Description	Qty.
1	Screw, SHCS .250-20 x .75	1
2	Flat washer	1
3	Cap	1
4	Spacer	1
5	Linkage rod	1

2. Lay linkage rod down on frame. Place a clean cloth in between linkage rod and frame to prevent scratches.
3. Repeat steps 1 and 2 for other linkage rod.

Remove crank covers

1. Remove both screws securing crank cover using a Phillips screwdriver.

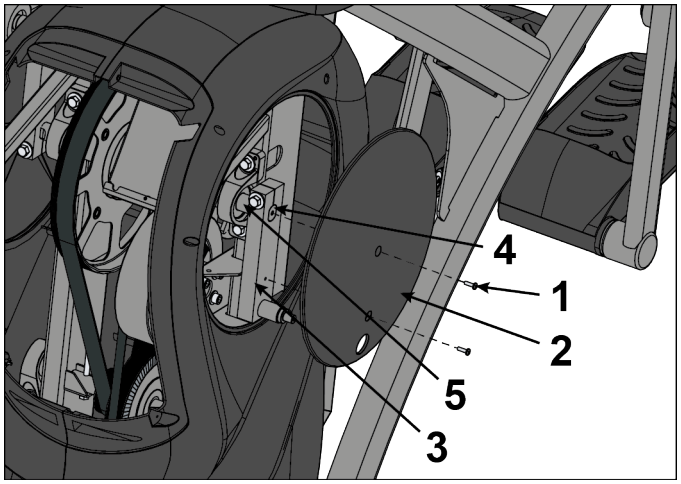

Item	Description	Qty.
1	Screw	2
2	Crank cover	1
3	Crank arm	1
4	Flush mount	1
5	Crank shaft	1

2. Remove crank cover.
3. Repeat steps for other crank cover.

Remove shrouds

1. Remove seven screws securing left shroud in place using a long Phillips screwdriver.

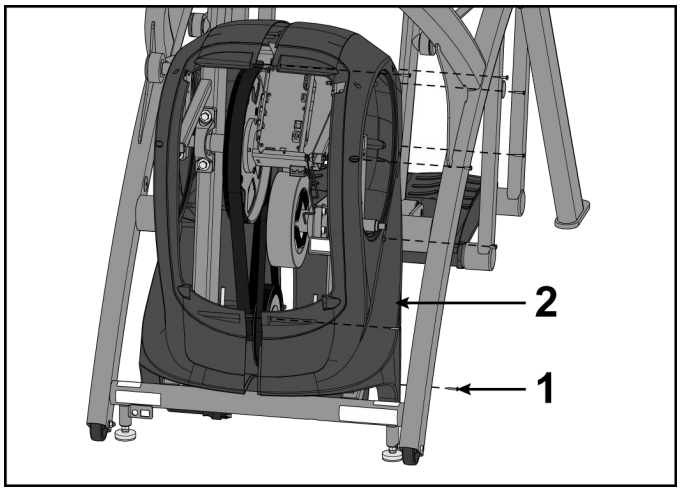

Item	Description	Qty.
1	Screw	7
2	Left shroud	1

2. Remove three screws securing right shroud in place using a long Phillips screwdriver.
3. Remove both shrouds.

Remove Brake Generator

1. Unplug brake generator from resistance control board.
2. Loosen lower pivot mounting bolts (HHCS) using a 1/2” socket wrench. This will loosen tension on primary and secondary belts.

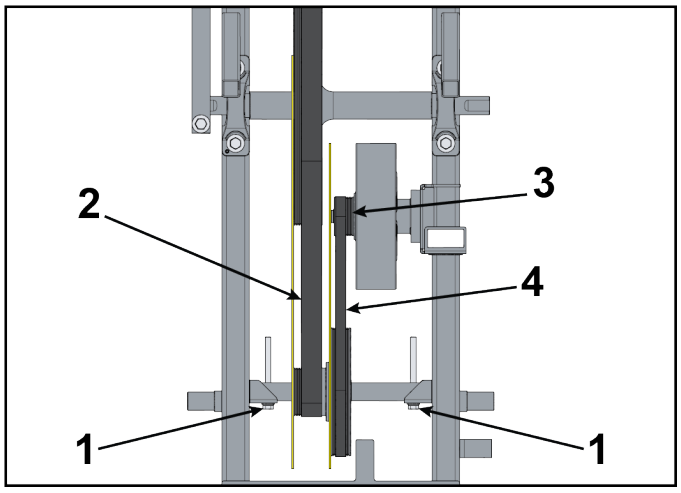

Item	Description	Qty
1	Lower pivot mounting bolt (HHCS)	2
2	Primary drive belt	1
3	Drive pulley	1
4	Secondary drive belt	1

3. Remove lower pivot mounting bolt (HHCS), lock washer, and flat washer from secondary drive belt side.

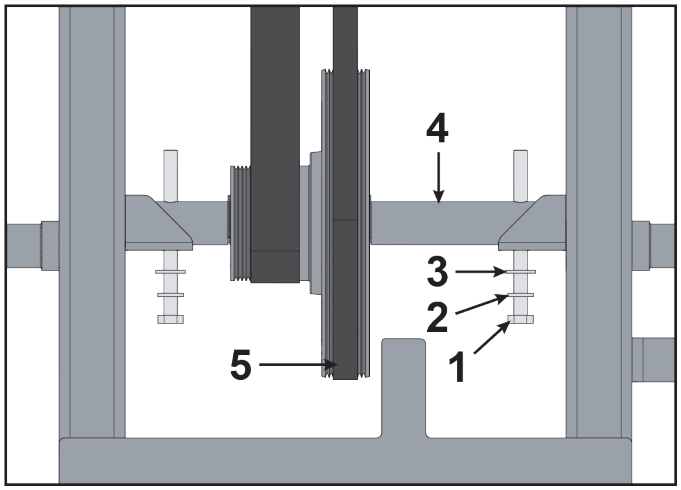

Item	Description	Qty
1	Lower pivot mounting bolt (HHCS)	1
2	Lock washer	1
3	Flat washer	1
4	Lower pulley shaft	1
5	Secondary drive belt	1

4. Remove secondary drive belt from lower pulley shaft.
5. Remove four bolts and washers securing brake generator to frame using a 5/16" Allen wrench..

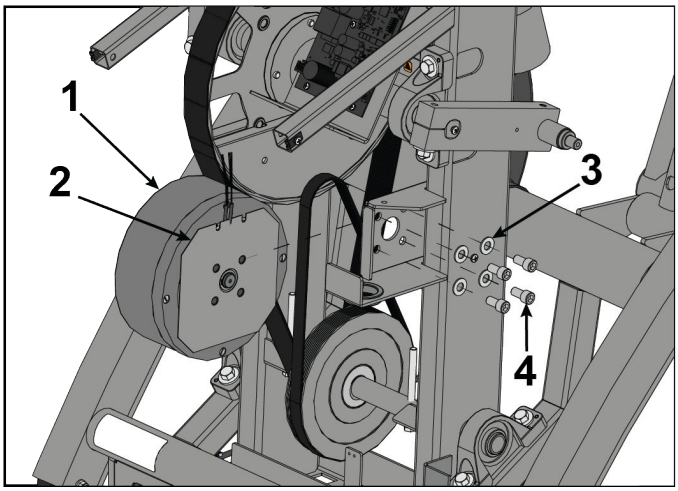

Item	Description	Qty
1	Brake Generator	1
2	Spacer	1
3	Washer	4
4	Bolt	4

6. Remove brake generator and spacer from frame.

Install Brake Generator

1. Apply Red Loctite® #271 to four bolts.

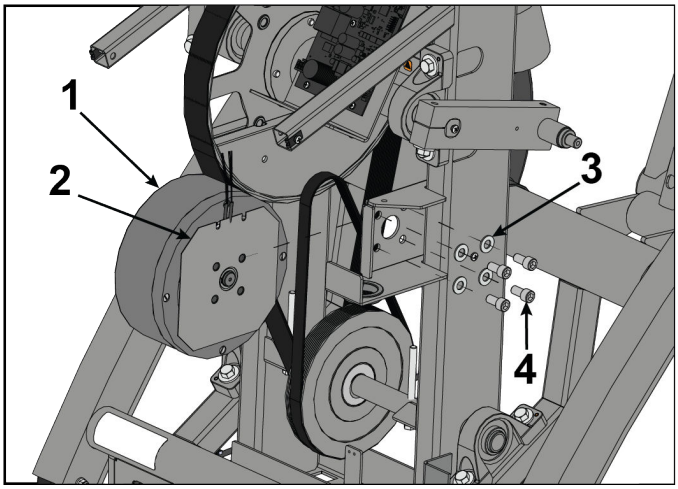

Item	Description	Qty
1	Brake Generator	1
2	Spacer	1
3	Washer	4
4	Bolt	4

2. Align spacer with brake generator.
3. Install four bolts and washers securing brake generator to frame using a 5/16" Allen wrench. Torque to 120 lb-in.
4. Plug brake generator into resistance control board.

5. Install secondary drive belt onto lower pulley shaft.

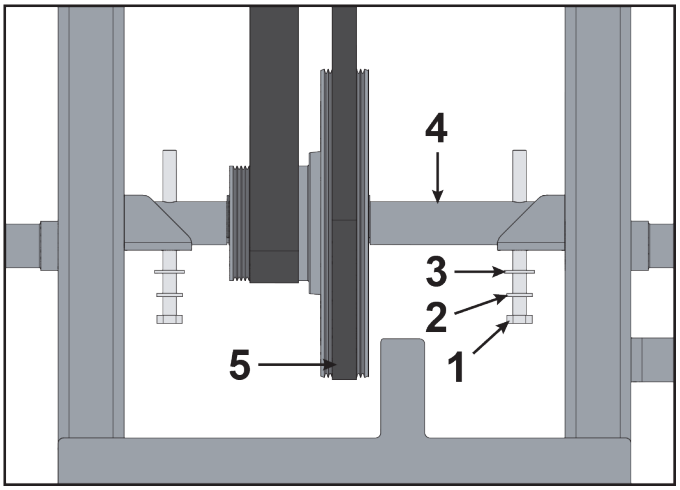

Item	Description	Qty
1	Lower pivot mounting bolt (HHCS)	1
2	Lock washer	1
3	Flat washer	1
4	Lower pulley shaft	1
5	Secondary drive belt	1

6. Install lower pivot mounting bolt (HHCS), lock washer, and flat washer to secondary drive belt side.
7. Tighten one HHCS a few turns then tighten the other HHCS a few turns using a 1/2" socket wrench.

   Alternate until both HHCS are secure. Verify that both pulleys are aligned properly using a straight edge. The straight edge must be no more than 1/16" from pulley edge.

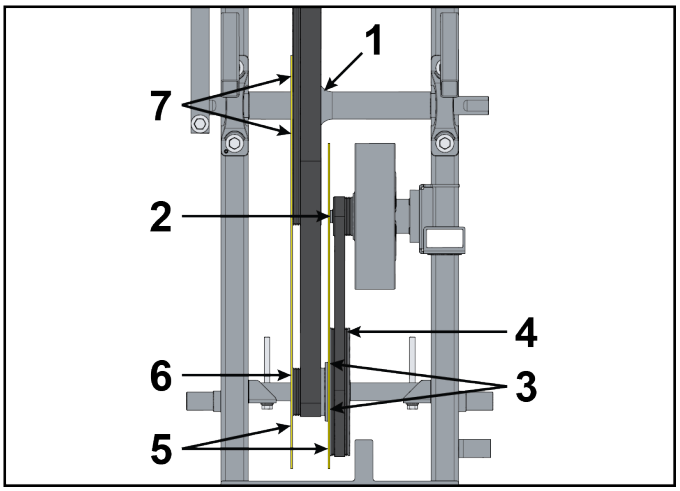

Item	Description	Qty.
1	Pulley	1
2	The straight edge must be no more than 1/16" from pulley edge	1
3	Touch straight edge here (two places)	2
4	Pulley	1
5	Straight edge	2
6	The straight edge must be no more than 1/16" from pulley edge	1
7	Touch straight edge here	2

Install shrouds

1. Place both shrouds in position.

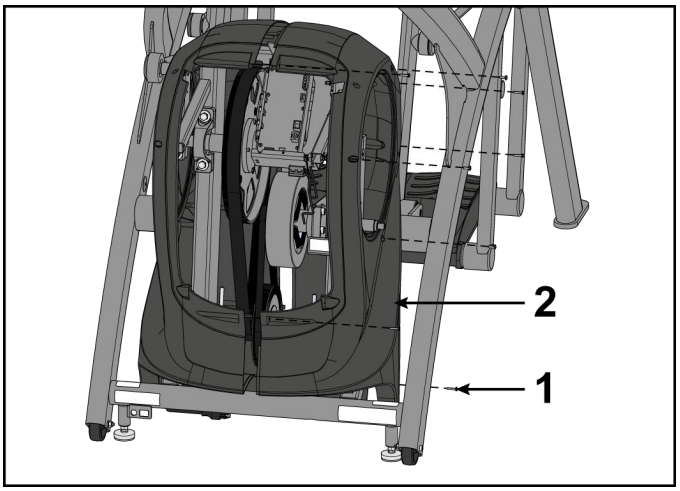

Item	Description	Qty.
1	Screw	7
2	Left shroud	1

2. Install screws securing each side cover using a long Phillips screwdriver.

Install crank covers

1. Inspect crank arm mounting. Crank arm should be flush with crank shaft. Adjust with 9/16” socket wrench if needed.

   NOTE: Crank shaft bolt must be tightened to 30 lbs-ft.

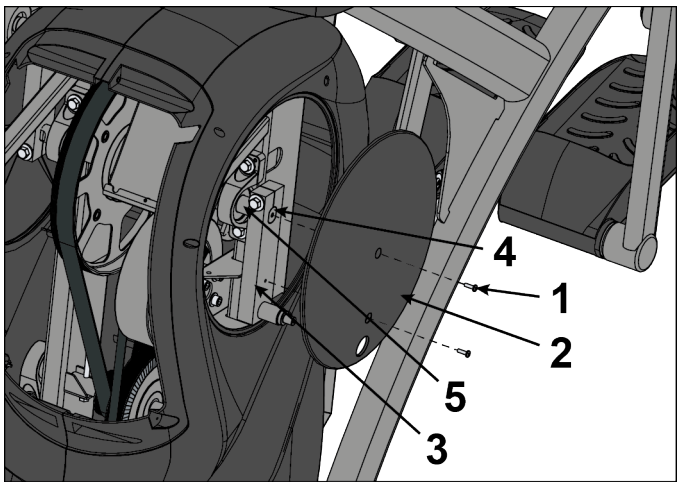

Item	Description	Qty.
1	Screw	2
2	Crank cover	1
3	Crank arm	1
4	Flush mount	1
5	Crank shaft	1

2. Place each crank cover in position.
3. Place Loctite® #242 on screws securing crank covers.
4. Install screws securing each crank cover in place using a Phillips screwdriver.

Install linkage rods

1. Install linkage rod on crank arm.

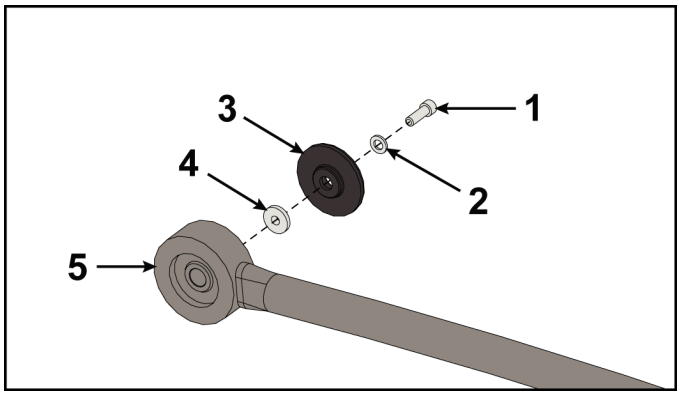

Item	Description	Qty.
1	Screw, SHCS .250-20 x .75	1
2	Flat washer	1
3	Cap	1
4	Spacer	1
5	Linkage rod	1

2. Place a drop of Loctite® #242 on SHCS and place another drop of Loctite® #242 into threads of shaft.
3. Install SHCS, flat washer, cap and spacer using a 3/16" Allen wrench.

   NOTE: SHCS must be tightened to a minimum of 90 in-lbs (10.16 Nm).
4. Repeat steps for other linkage rod.

Install front access cover

Do not over tighten screws.

1. Place front access cover in place.

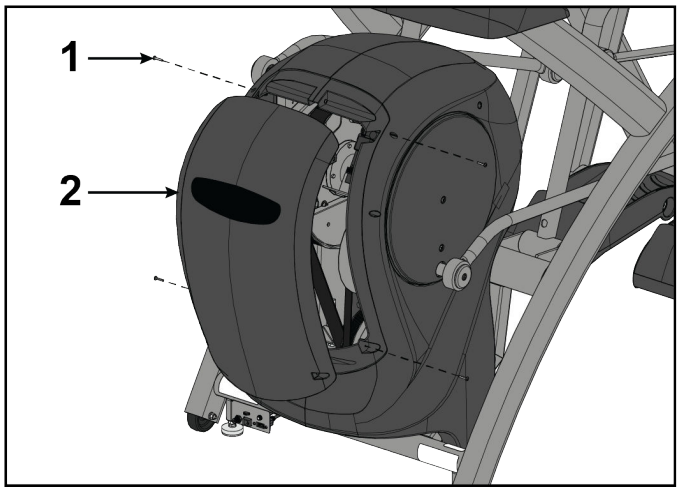

Item	Description	Qty.
1	Screw	4
2	Front access cover	1

2. Install screws using a Phillips screwdriver.

Complete Installation

Operate unit at all levels to verify proper operation.

Contact Heart Rate Grips - Lower Body

Tools Required:

- Phillips screwdriver
- Side cutter
- Tape

Time:
30 minutes

Disconnect power source

Unplug power cord from power outlet.

WARNING: Shock and electrocution hazard.

- Unplug unit and let sit 10 minutes before cleaning or performing maintenance.
- Electrical charge can remain in unit after unplugging.
- Keep water and liquids away from electrical parts.

Remove Rear Cover

1. Remove screws securing console assembly and console back cover to console weldment using a Phillips screwdriver.

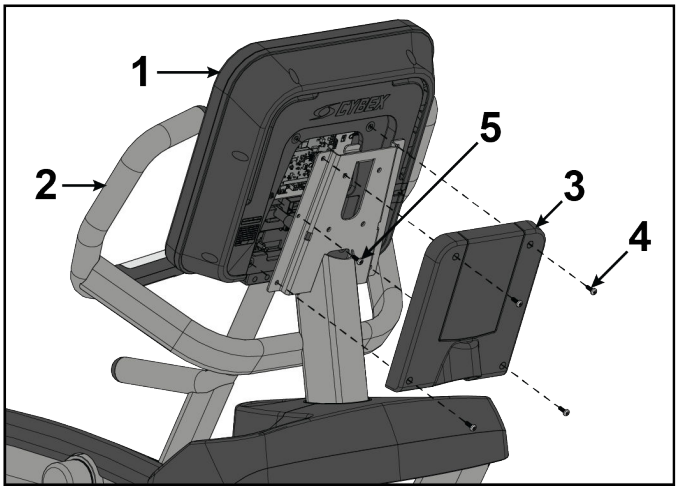

Item	Description	Qty
1	Console Assembly	1
2	Console Weldment	1
3	Console Back Cover	1
4	Screw, Pan Head Phillips, M5 x 0.8 x 14	4
5	Grounding Screw, Pan Head Phillips, M5 x 0.8 x 14	1

2. Remove grounding screw securing console assembly to console weldment using a Phillips screwdriver.

   NOTE: Not all consoles include a grounding screw.

Remove Heart Rate Grips

1. Remove screws securing bottom and top grip to handle using a Phillips screwdriver.

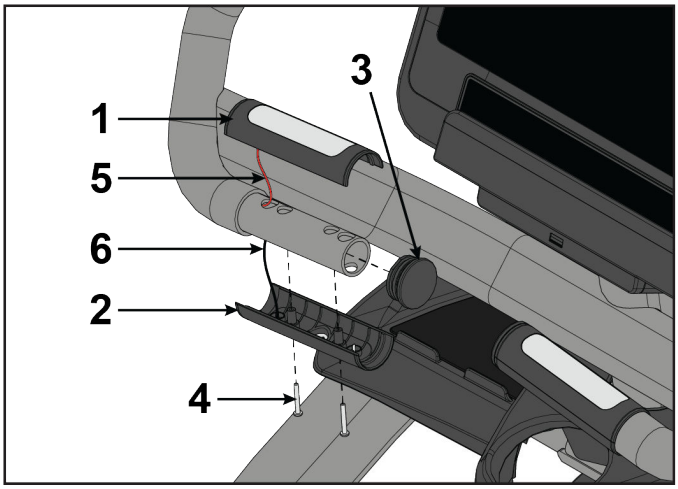

Item	Description	Qty
1	Grip, Heart Rate, Top	1
2	Grip, Heart Rate, Bottom	1
3	End Cap	1
4	Screw, Pan Head Phillips, 1.12"	4
5	Red Heart Rate Wire	1
6	Black Heart Rate Wire	1

2. Remove end cap from handle.
3. Disconnect the red and black heart rate wires from each grip.
4. Repeat steps for opposite handle.
5. Remove heart rate cables from original weldment.

Install Heart Rate Cable

1. Unplug heart rate cable from console.

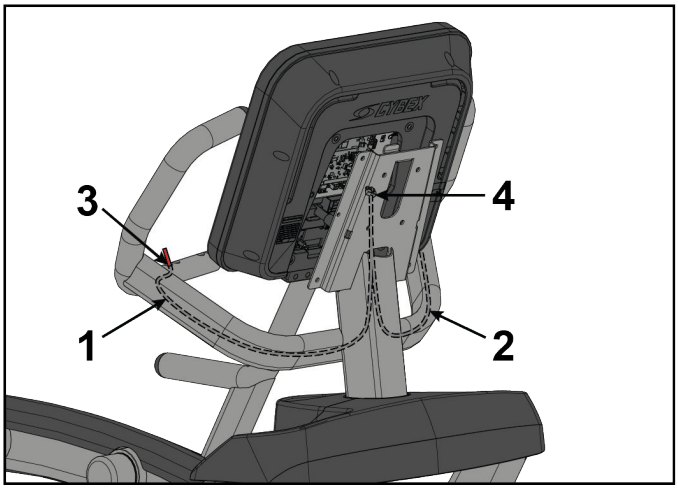

Item	Description	Qty
1	Right Heart Rate Cable	1
2	Left Heart Rate Cable	1
3	Heart Rate Connector	1
4	Top Hole	1

2. Cut the heart rate connector off of the left and right heart rate cables using a side cutter.
3. Tape the new left heart rate cable to the old left heart rate cable.

   NOTE: New heart rate cable is marked LEFT and RIGHT.
4. Tape the new right heart rate cable to the old right heart rate cable.
5. Pull both cables from grip ends until new cable exits the top hole.
6. Remove tape securing the new cables.
7. Plug heart rate cable into console.

Install Heart Rate Grips

1. Pull the red heart rate wire through the first top hole.

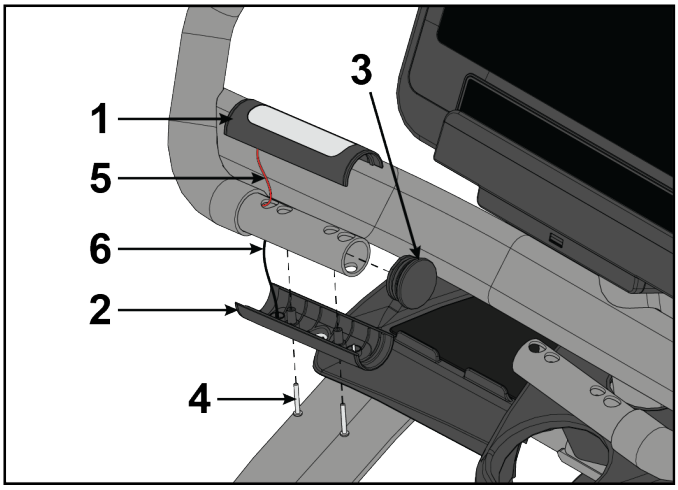

Item	Description	Qty
1	Grip, Heart Rate, Top	1
2	Grip, Heart Rate, Bottom	1
3	End Cap	1
4	Screw, Pan Head Phillips, 1.12"	4
5	Red Heart Rate Wire	1
6	Black Heart Rate Wire	1

2. Pull the black heart rate wire through the first bottom hole.
3. Connect the red heart rate wire to the tab on the top grip. Verify connection is secure.
4. Connect the black heart rate wire to the tab on the bottom grip. Verify connection is secure.
5. Install end cap to handle.

6. Install screws securing bottom and top grip to handle using a Phillips screwdriver.

   NOTE: Do not pinch heart rate wires or allow contacts to touch each other when installing grips.

7. Repeat steps for opposite handle.

Install Rear Cover

1. Install grounding screw securing console assembly to console weldment using a Phillips screwdriver.

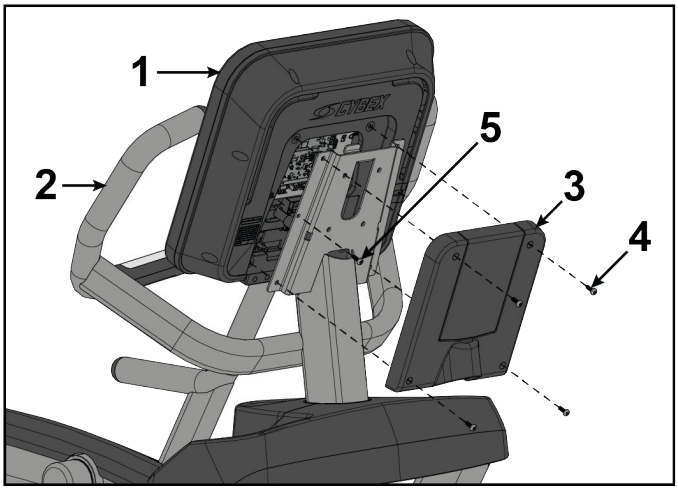

Item	Description	Qty
1	Console Assembly	1
2	Console Weldment	1
3	Console Back Cover	1
4	Screw, Pan Head Phillips, M5 x 0.8 x 14	4
5	Grounding Screw, Pan Head Phillips, M5 x 0.8 x 14	1

   NOTE: Not all consoles include a grounding screw.

2. Install screws securing console assembly and console back cover to console weldment using a Phillips screwdriver.

Plug in power cord

Plug power cord into power outlet.

Complete Installation

1. Operate the unit at all levels to verify proper operation.
2. Verify proper operation of contact heart rate grips.

Contact Heart Rate Grips - Total Body

Tools Required:

- Phillips screwdriver
- Flat head screwdriver
- Side cutter
- Tape

Time:
30 minutes

Disconnect power source

Unplug power cord from power outlet.

WARNING: Shock and electrocution hazard.

- Unplug unit and let sit 10 minutes before cleaning or performing maintenance.
- Electrical charge can remain in unit after unplugging.
- Keep water and liquids away from electrical parts.

Remove Heart Rate Grips

1. Remove screws securing front and back grip to handle using a Phillips screwdriver.

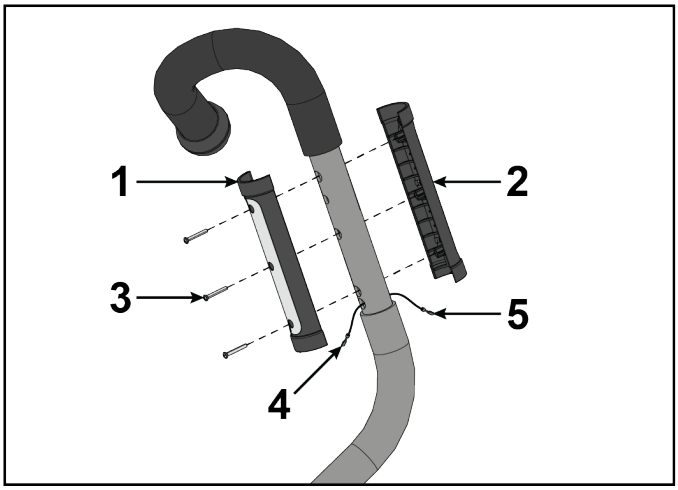

Item	Description	Qty
1	Grip, Heart Rate, Back	1
2	Grip, Heart Rate, Front	1
3	Screw, Pan Head Phillips, 6-19 x 16	3
4	Black Heart Rate Wire	1
5	Red Heart Rate Wire	1

2. Disconnect the heart rate wires from each grip.

Install Heart Rate Cable

1. Unplug handle heart rate cable from frame heart rate cable.

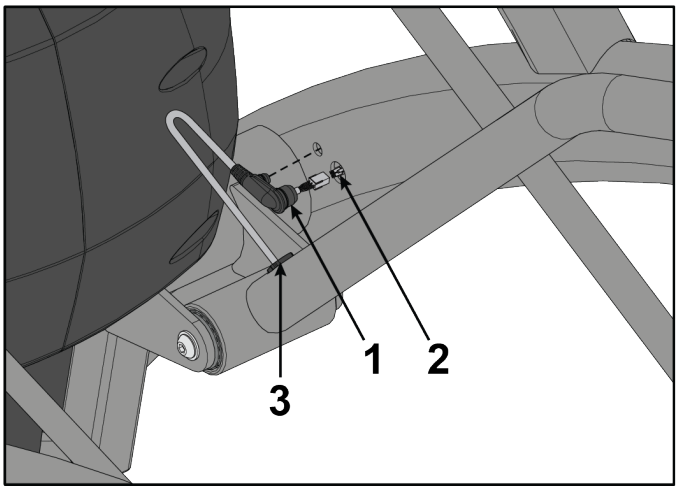

Item	Description	Qty
1	Heart Rate Cable, Handle	1
2	Heart Rate Cable, Frame	1
3	Strain Relief	1

2. Remove strain relief from arm using a flat head screwdriver.
3. Cut the strain relief off of the heart rate cable using a side cutter.
4. Tape the heart rate cable connections of the new cable to the cut end of the old cable.

   NOTE: Verify the connection is secure.
5. Pull the old cable through bottom of handle until end of the new cable is up to the top of handle opening.
6. Connect heart rate cable from handle to frame heart rate cable.

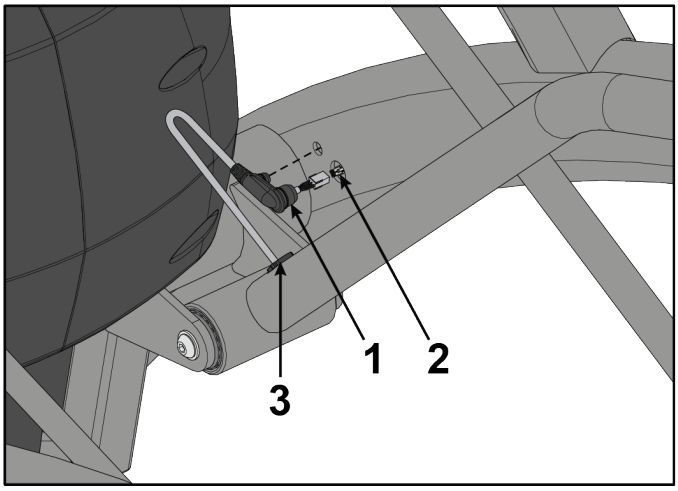

Item	Description	Qty
1	Heart Rate Cable, Handle	1
2	Heart Rate Cable, Frame	1
3	Strain Relief	1

7. Press ends of handle heart rate cable into frame.
8. Press strain relief into hole in arm.

Install Heart Rate Grips

1. Pull the black heart rate wire through the lowest back hole.

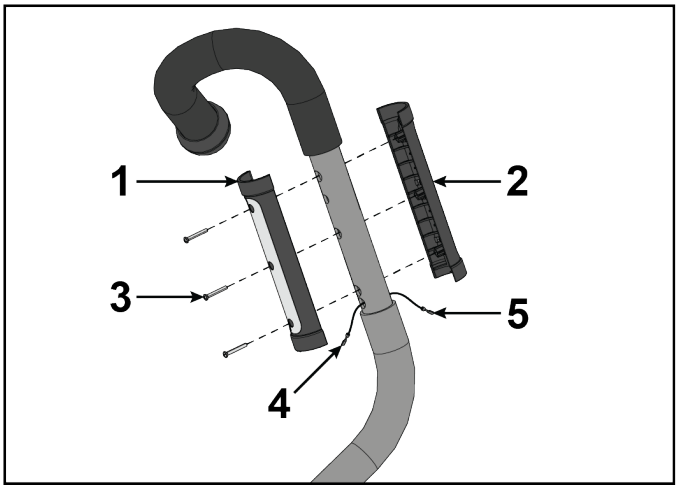

Item	Description	Qty
1	Grip, Heart Rate, Back	1
2	Grip, Heart Rate, Front	1
3	Screw, Pan Head Phillips, 6-19 x 16	3
4	Black Heart Rate Wire	1
5	Red Heart Rate Wire	1

2. Pull the red heart rate wire through the lowest front hole.
3. Connect the black heart rate wire to the tab on the back grip.
4. Connect the red heart rate wire to the tab on the front grip.
5. Install screws securing front and back grip to handle using a Phillips screwdriver.

   NOTE: Do not pinch heart rate wires or allow contacts to touch each other when installing grips.

Plug in power cord

Plug power cord into power outlet.

Complete Installation

1. Operate the unit at all levels to verify proper operation.

2. Verify proper operation of contact heart rate grips.

Display Cable

Tools Required:

- Phillips screwdriver
- Stubby Phillips screwdriver

Time:
30 minutes

Disconnect power source

Unplug power cord from power outlet.

WARNING: Shock and electrocution hazard.

- Unplug unit and let sit 10 minutes before cleaning or performing maintenance.
- Electrical charge can remain in unit after unplugging.
- Keep water and liquids away from electrical parts.

Remove Rear Cover

1. Remove screws securing console assembly and console back cover to console weldment using a Phillips screwdriver.

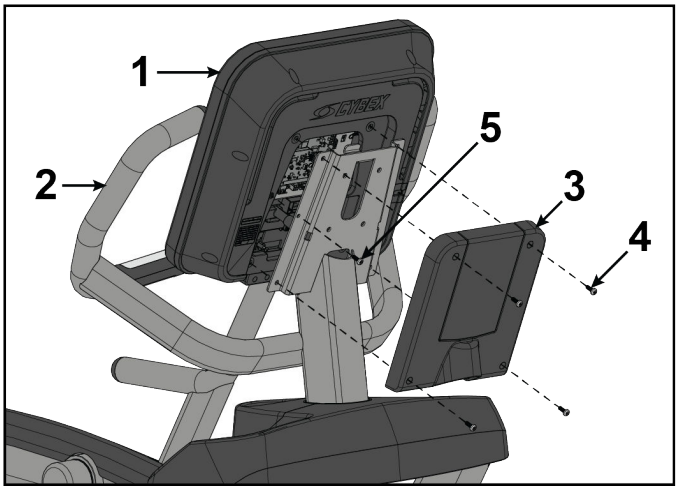

Item	Description	Qty
1	Console Assembly	1
2	Console Weldment	1
3	Console Back Cover	1
4	Screw, Pan Head Phillips, M5 x 0.8 x 14	4
5	Grounding Screw, Pan Head Phillips, M5 x 0.8 x 14	1

2. Remove grounding screw securing console assembly to console weldment using a Phillips screwdriver.

   NOTE: Not all consoles include a grounding screw.

Remove Accessory Tray Bottom

1. Remove the three screws securing the accessory tray bottom to the accessory tray base using a Phillips screwdriver.

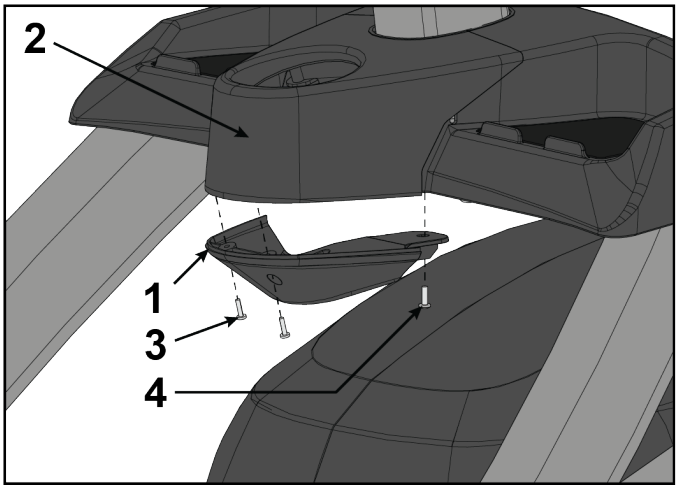

Item	Description	Qty.
1	Accessory Tray Bottom	1
2	Accessory Tray Top	1
3	Screw, Pan Head Phillips, 6 x .50"	2
4	Screw, Pan Head Phillips, 8-16 x .50"	1

2. Remove the accessory tray bottom

Remove Accessory Tray Top

Remove the two screws securing the accessory tray top to the accessory tray base using a stubby Phillips screwdriver.

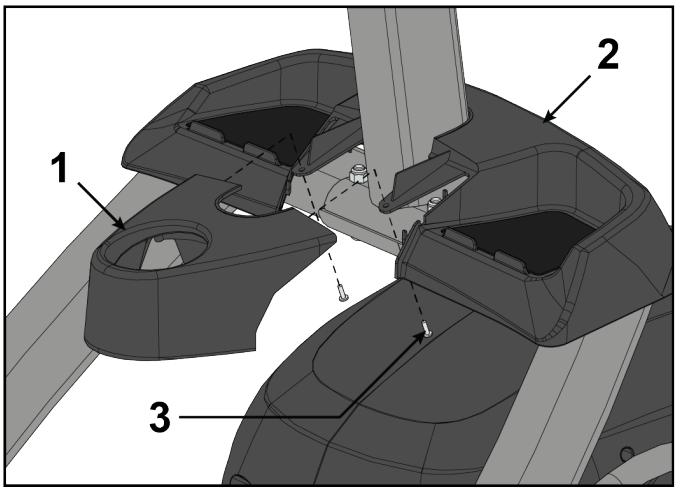

Item	Description	Qty.
1	Accessory Tray Top	1
2	Accessory Tray Base	1
3	Screw, Pan Head Phillips, 8-16 x .50"	2

Remove Accessory Tray Base

Remove the four screws securing the accessory tray base to the frame using a stubby Phillips screwdriver.

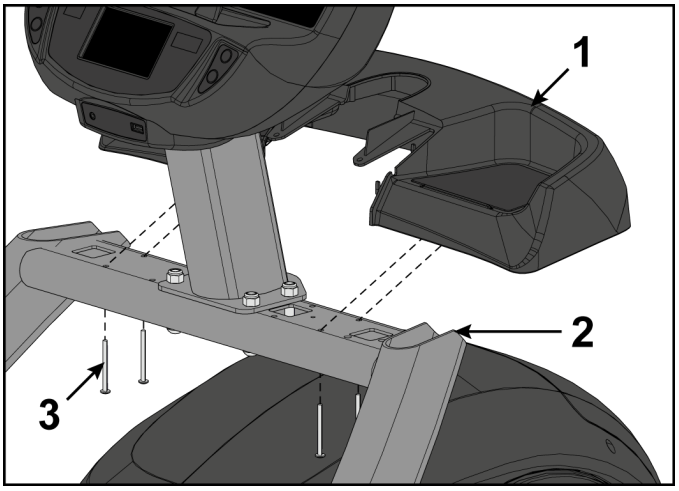

Item	Description	Qty
1	Accessory tray base	1
2	Frame	1
3	Screws	4

Replace Display Cable

1. Unplug display cable from base.

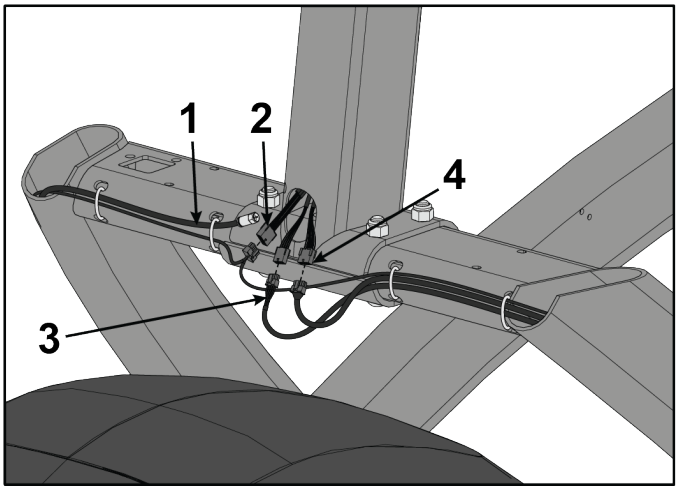

Item	Description	Qty
1	Cable, Coax	1
2	Cable, Heart Rate and Keypad Switches	1
3	Cable, Base Signal	1
4	Cable, Console to Base Power	1

2. Remove display cable from console weldment.
3. Install new display cable into console weldment.
4. Plug display cable into base. Connections include: Coax cable, heart rate and keypad switch cable, base signal cable , and console to base power cable.

Install Cables to Console

Plug the console cables into the console.

50L Console

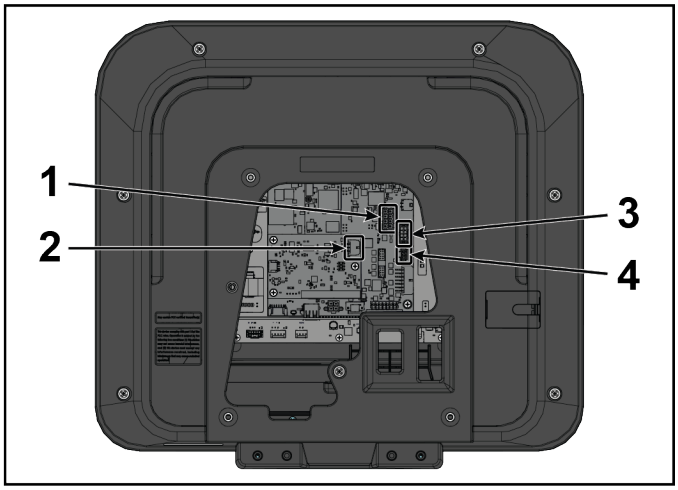

Item	Description	Qty
1	Cable, Console to Base Power	1
2	Cable, Lifepulse	1
3	Cable, Base Signal	1
4	Cable, Heart Rate and Keypad Switches	1

70T Console

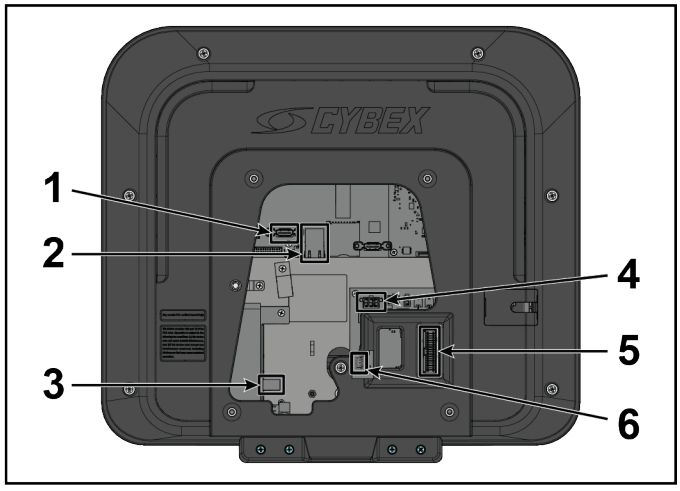

Item	Description	Qty
1	Cable, HDMI	1
2	Cable, Ethernet	1
3	Cable, Coax	1
4	Cable, External Power	1
5	Cable, PCB to Console Power	1
6	Cable, IR	1

Install Accessory Tray Base

Install the four screws securing accessory tray base to frame using a Phillips screwdriver.

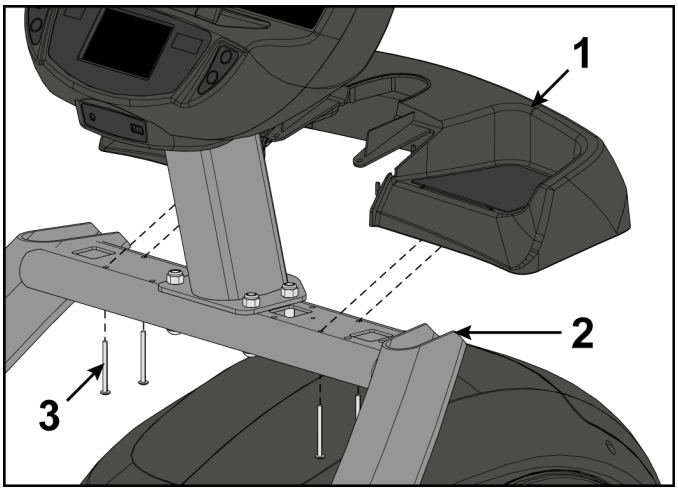

Item	Description	Qty
1	Accessory tray base	1
2	Frame	1
3	Screws	4

Install Accessory Tray Top

Install screws securing accessory tray top to accessory tray base using a stubby Phillips screwdriver.

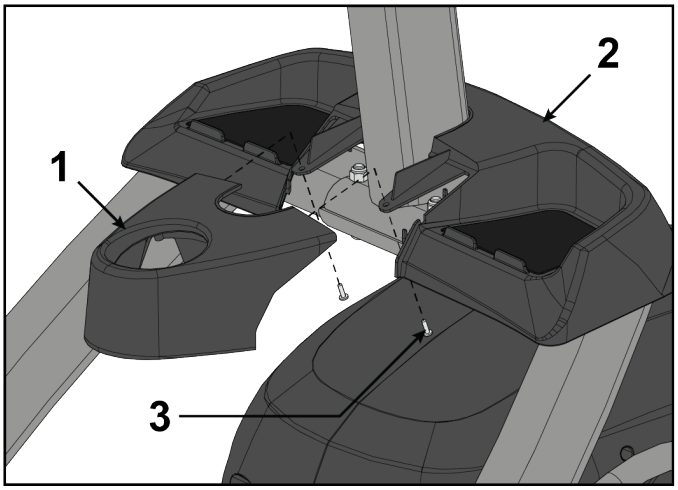

Item	Description	Qty.
1	Accessory Tray Top	1
2	Accessory Tray Base	1
3	Screw, Pan Head Phillips, 8-16 x .50"	2

Install Accessory Tray Bottom

Install the accessory tray bottom to the accessory tray base with three screws using a Phillips screwdriver.

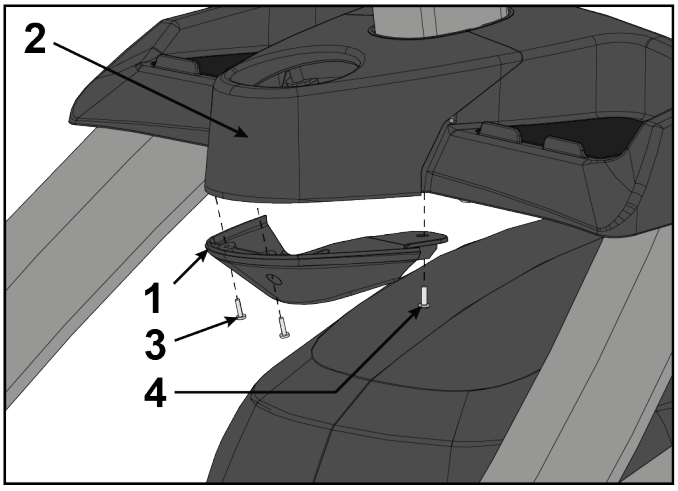

Item	Description	Qty.
1	Accessory Tray Bottom	1
2	Accessory Tray Top	1
3	Screw, Pan Head Phillips, 6 x .50"	2
4	Screw, Pan Head Phillips, 8-16 x .50"	1

Install Rear Cover

1. Install grounding screw securing console assembly to console weldment using a Phillips screwdriver.

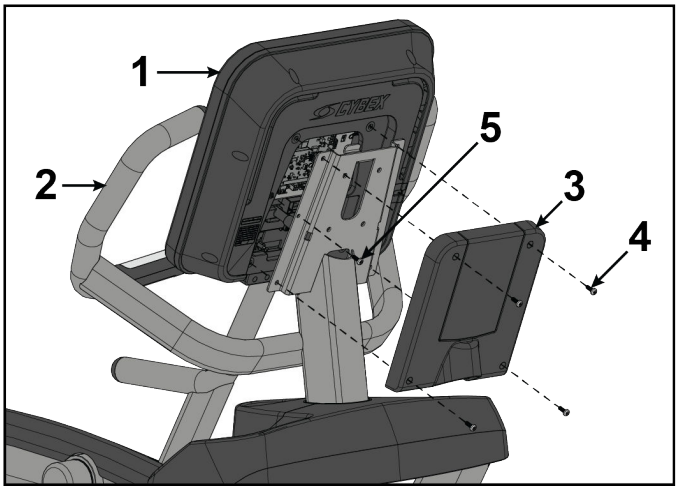

Item	Description	Qty
1	Console Assembly	1
2	Console Weldment	1
3	Console Back Cover	1
4	Screw, Pan Head Phillips, M5 x 0.8 x 14	4
5	Grounding Screw, Pan Head Phillips, M5 x 0.8 x 14	1

NOTE: Not all consoles include a grounding screw.

2. Install screws securing console assembly and console back cover to console weldment using a Phillips screwdriver.

Plug in power cord

Plug power cord into power outlet.

Complete Installation

Operate unit at all levels to verify proper operation.

Handle Assembly

Tools Required:

- 3/16” Allen wrench
- 7/32” Allen wrench (2)
- Torque wrench

Time:
30 minutes

Disconnect power source

Unplug power cord from power outlet.

WARNING: Shock and electrocution hazard.

- Unplug unit and let sit 10 minutes before cleaning or performing maintenance.
- Electrical charge can remain in unit after unplugging.
- Keep water and liquids away from electrical parts.

Remove Heart Rate Cable

Unplug handle heart rate cable from frame heart rate cable.

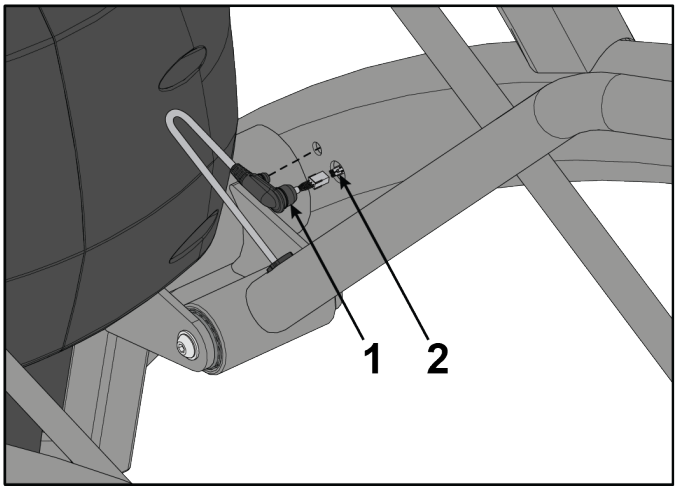

	Description	Qty.
1	Heart Rate Cable, Handle	1
2	Heart Rate Cable, Frame	1

Remove Arm Handle Linkage

1. Remove screw, flat washer, linkage rod cap, and spacer securing arm handle linkage to handle assembly using a 3/16" Allen wrench.

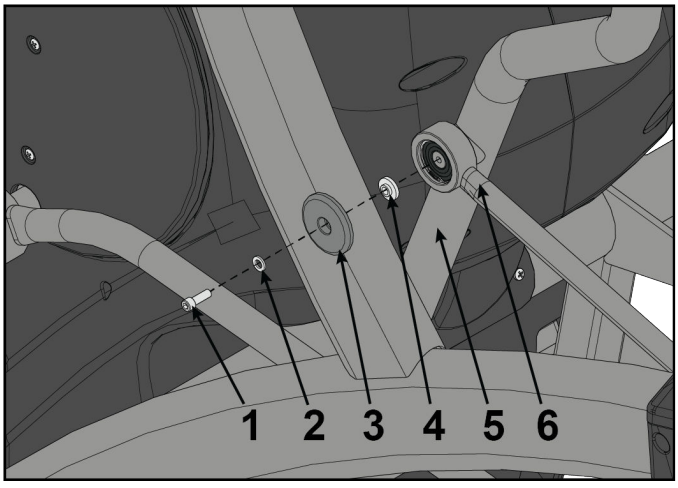

Item	Description	Qty
1	Screw, Socket Head, .250-20	1
2	Washer, Flat	1
3	Linkage Rod Cap	1
4	Spacer, Flange	1
5	Handle Assembly, Left	1
6	Arm Handle Linkage, Left	1

2. Remove arm handle linkage from handle assembly.

Remove Handle Assembly

1. Remove screw and washer from the handle assembly using two 7/32” Allen wrenches.

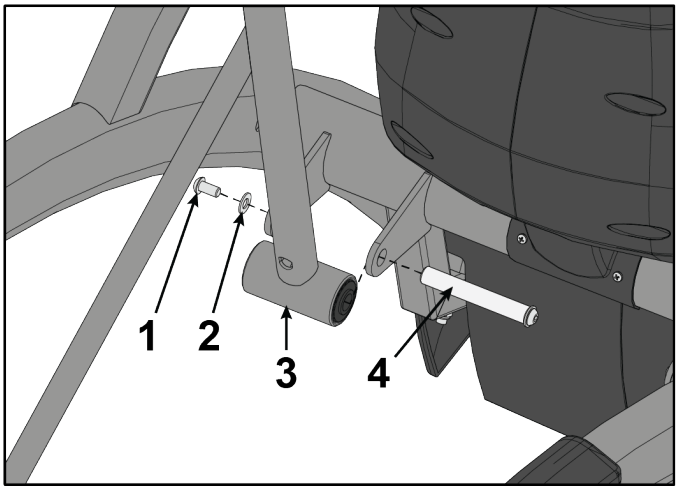

Item	Description	Qty
1	Screw	1
2	Washer	1
3	Handle Assembly, Left	1
4	Pivot Pin Assembly	1

2. Slide pivot pin assembly out and remove handle assembly.

Install Handle Assembly

1. Apply Loctite to threads inside the pivot pin and screw.
2. Place new handle assembly in position and slide pivot pin assembly back in place.
3. Install screw and washer to the handle assembly using two 7/32” Allen wrenches.

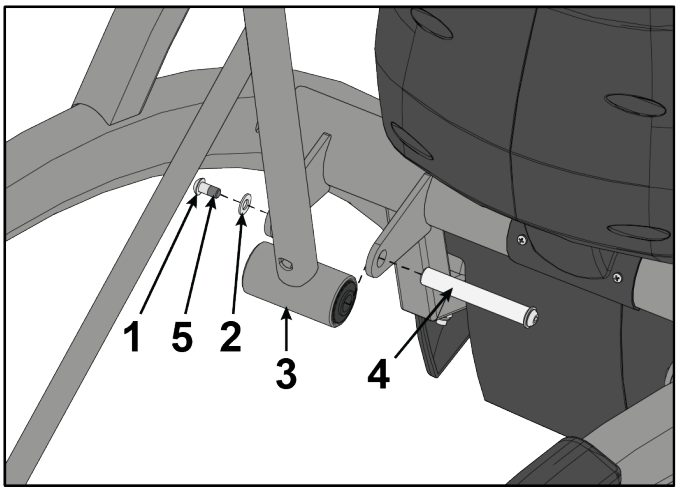

Item	Description	Qty
1	Screw	1
2	Washer	1
3	Handle Assembly, Left	1
4	Pivot Pin Assembly	1
5	Loctite #242	1

Install Arm Handle Linkage

1. Slide arm handle linkage onto handle assembly.
2. Apply Loctite to the screw threads.

3. Install screw, flat washer, linkage rod cap, and spacer securing arm handle linkage to handle assembly using a 3/16" Allen wrench.

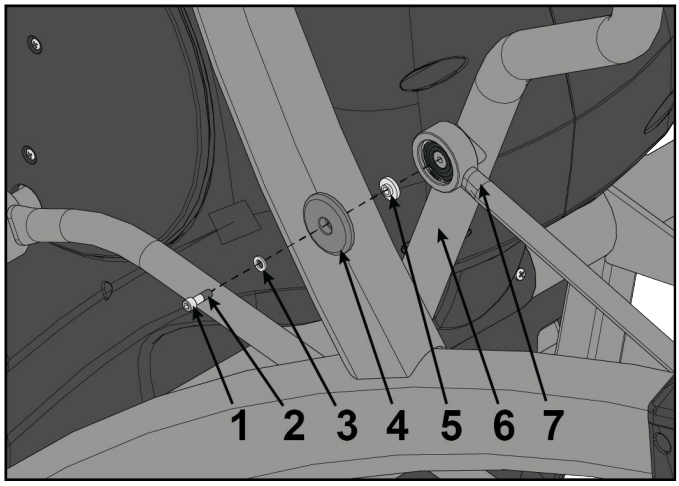

Item	Description	Qty
1	Screw, Socket Head, .250-20	1
2	Loctite #242	1
3	Washer, Flat	1
4	Linkage Rod Cap	1
5	Spacer, Flange	1
6	Handle Assembly, Left	1
7	Arm Handle Linkage, Left	1

4. Tighten screw to a minimum of 90 in-lbs.

Install Heart Rate Cable

1. Connect handle heart rate cable from frame heart rate cable.

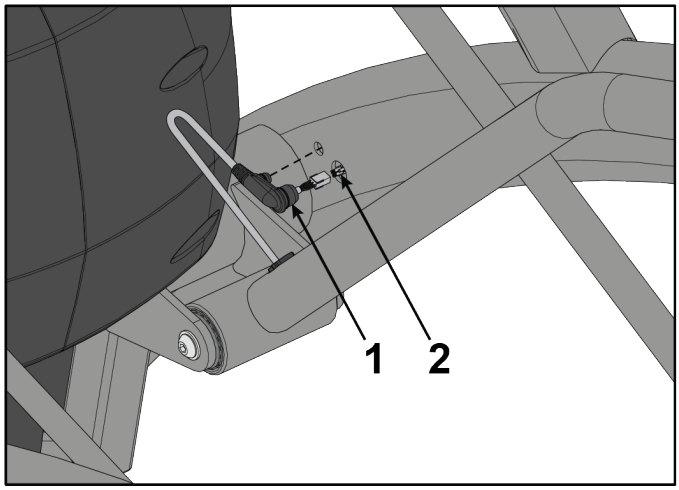

	Description	Qty.
1	Heart Rate Cable, Handle	1
2	Heart Rate Cable, Frame	1

2. Press ends of handle heart rate cable into frame.

Plug in power cord

Plug power cord into power outlet.

Complete Installation

1. Operate the unit at all levels to verify proper operation.
2. Verify proper operation of contact heart rate grips.

Linkage Rods

Tools Required:

- 3/16” Allen wrench
- Torque wrench

Time:
20 minutes

Disconnect power source

Unplug power cord from power outlet.

WARNING: Shock and electrocution hazard.

- Unplug unit and let sit 10 minutes before cleaning or performing maintenance.
- Electrical charge can remain in unit after unplugging.
- Keep water and liquids away from electrical parts.

Remove linkage rod

1. Remove screw, flat washer, cap and spacer from both ends of linkage rod using a 3/16” Allen wrench.

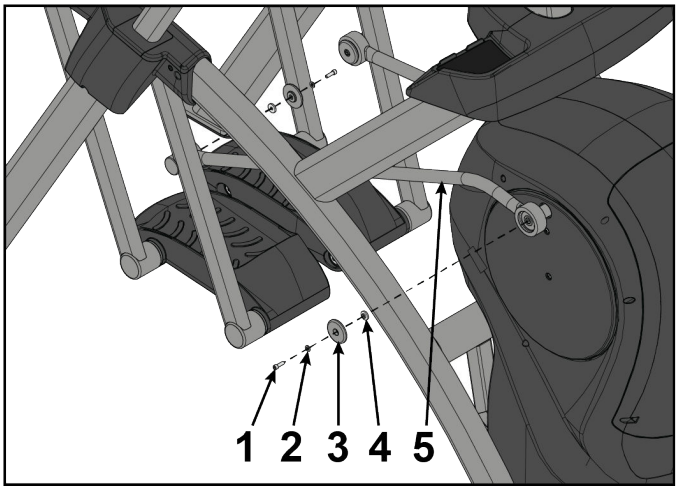

Item	Description	Qty
1	Screw, Socket Head, .250-20	2
2	Washer, Flat	2
3	Linkage Rod Cap	2
4	Spacer, Flange	2
5	Linkage Rod	1

2. Remove linkage rod.

Install linkage rod

1. Place linkage rod in correct position.

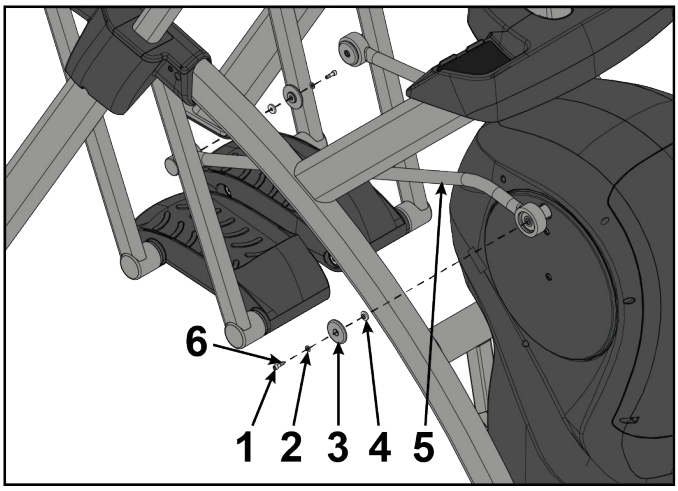

Item	Description	Qty
1	Screw, Socket Head, .250-20	2
2	Washer, Flat	2
3	Linkage Rod Cap	2
4	Spacer, Flange	2
5	Linkage Rod	1
6	Loctite #242	2

2. Place a drop of Loctite on the threads of screws and place another drop of Loctite into the shaft (where the screws will be tightened into).

3. Install spacers, caps, flat washers, screws.

   NOTE: Screws must be tightened to a minimum of 90 lbs-in.

Plug in power cord

Plug power cord into power outlet.

Complete Installation

Operate unit at all levels to verify proper operation.

Primary Drive Belt

Tools Required:

- Clean cloth
- Phillips screwdriver
- Long Phillips screwdriver
- 3/16” Allen wrench
- 1/2” Socket wrench
- 9/16” Socket wrench
- 9/16” Open end wrench
- Torque wrench
- Straight edge

Time:

60 minutes

Disconnect power source

Unplug power cord from power outlet.

WARNING: Shock and electrocution hazard.

- Unplug unit and let sit 10 minutes before cleaning or performing maintenance.
- Electrical charge can remain in unit after unplugging.
- Keep water and liquids away from electrical parts.

Remove front access cover

1. Remove screws securing front access cover using a Phillips screwdriver.

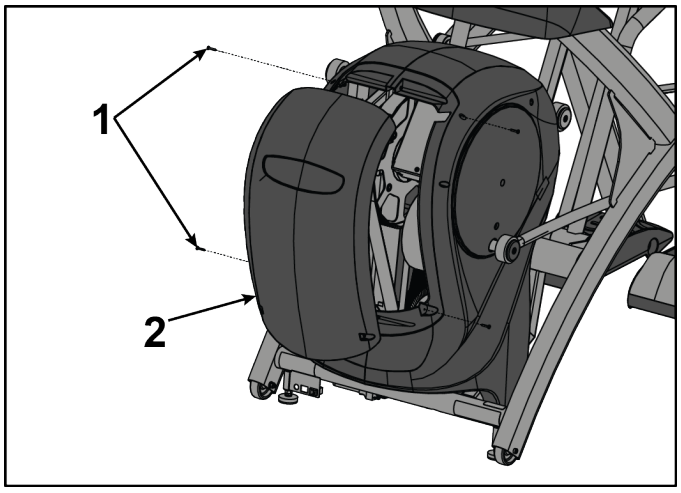

Item	Description	Qty.
1	Screw	4
2	Front access cover	1

2. Remove access cover.

WARNING: Burn hazard.

Do not touch flywheel until cool.

Remove left linkage rod

1. Remove socket head cap screw (SHCS), flat washer, cap and spacer securing linkage rod using a 3/16” Allen wrench.

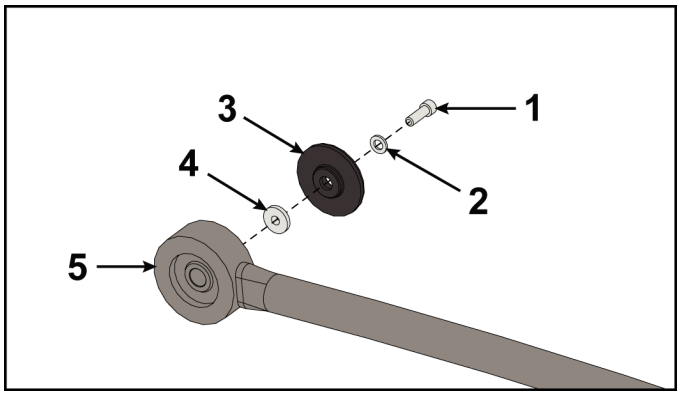

Item	Description	Qty.
1	Screw, SHCS .250-20 x .75	1
2	Flat washer	1
3	Cap	1
4	Spacer	1
5	Linkage rod	1

2. Lay linkage rod down on frame. Place a clean cloth in between linkage rod and frame to prevent scratches.

Remove crank covers

1. Remove both screws securing crank cover using a Phillips screwdriver.

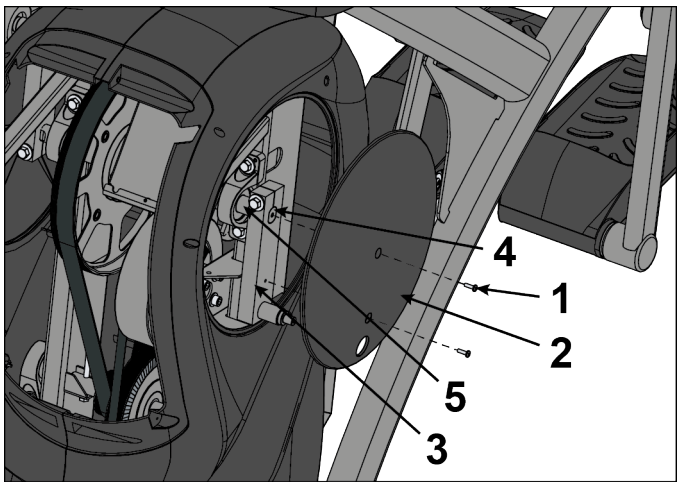

Item	Description	Qty.
1	Screw, Pan head Phillips 10/32 x .62	2
2	Crank cover	1
3	Crank arm	1
4	Flush mount	1
5	Crank shaft	1

2. Remove crank cover.
3. Repeat steps for other crank cover.

Remove shrouds

1. Remove seven screws securing left shroud in place using a long Phillips screwdriver.

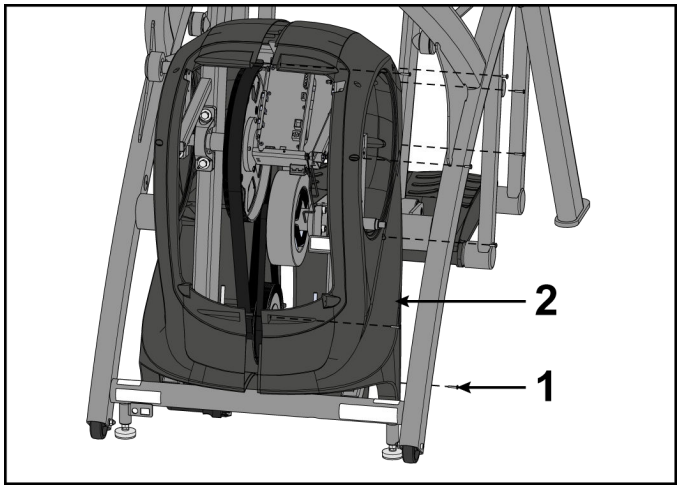

Item	Description	Qty.
1	Screw	7
2	Left shroud	1

2. Remove three screws securing right shroud in place using a long Phillips screwdriver.
3. Remove both shrouds.

Remove lower pulley assembly

1. Remove the two Hex Head Cap Screws (HHCS), two lock washers and two flat washers from the lower pulley shaft using a 1/2" socket wrench.

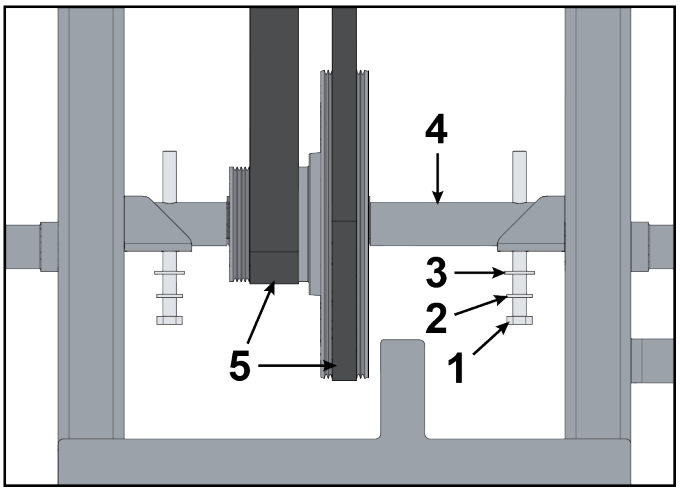

Item	Description	Qty.
1	HHCS	2
2	Lock washer	2
3	Flat washer	2
4	Lower pulley shaft	1
5	Drive belt	2

2. Remove the lower pulley assembly out of the drive belts and from the frame.

Remove crank shaft pillow block bolts

1. Remove two bolts, four washers, and two nuts from left pillow block using a 9/16" socket wrench and a 9/16" open end wrench.

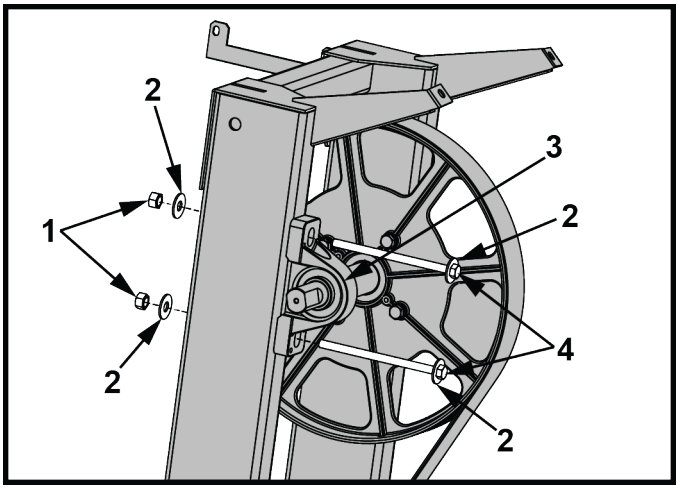

Item	Description	Qty.
1	Nut	2
2	Washers	4
3	Pillow block	1
4	Bolt	2

2. Loosen two bolts on right pillow block. Do not remove bolts.

Remove primary drive belt

Pull back on left side of crank shaft assembly and slide primary drive belt past pillow block.

Install primary drive belt

Install primary drive belt by pulling back left side of crank shaft assembly and sliding primary drive belt past pillow block.

Install crank shaft pillow block bolts

1. Insert alignment pin on pillow block into hole on frame

2. Install two bolts, four washers, and two nuts to left pillow block using a 9/16” socket wrench and a 9/16” open end wrench.

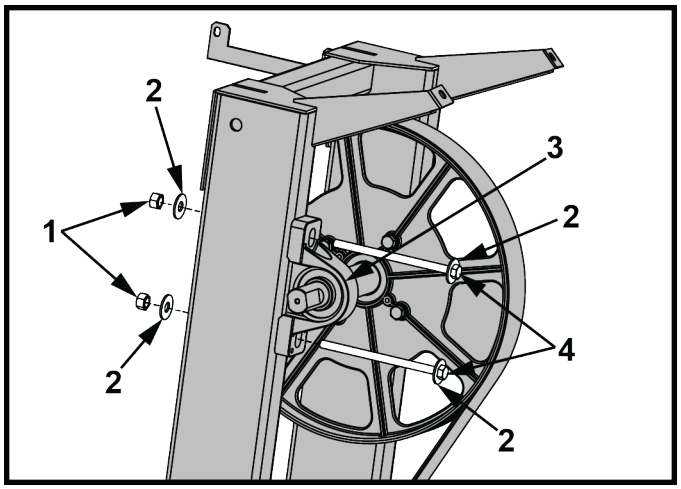

Item	Description	Qty.
1	Nut	2
2	Washers	4
3	Pillow block	1
4	Bolt	2

3. Install bolts on the right pillow block.

Install lower pulley assembly

1. Slide the lower pulley assembly through both drive belts and into place on the frame.
   Confirm that both drive belts are straight and centered in place.
2. Tighten one HHCS a few turns then tighten the other HHCS a few turns using a 1/2” socket wrench.
   Alternate until both HHCS are secure. Verify that both pulleys are aligned properly using a straight edge. The straight edge must be no more than 1/16” from pulley edge.

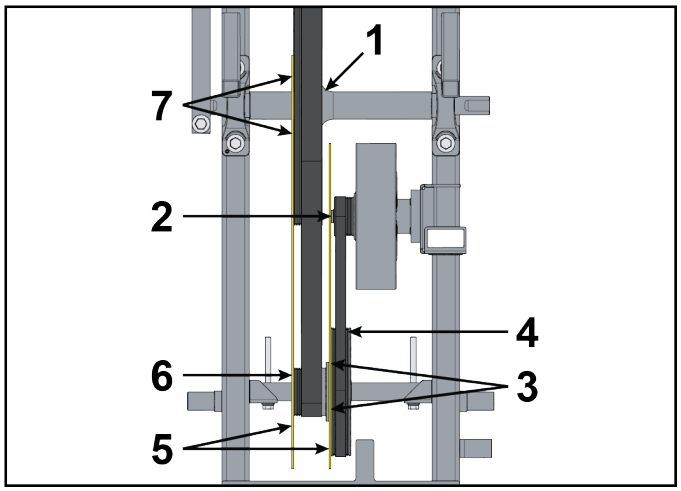

Item	Description	Qty.
1	Pulley	1
2	The straight edge must be no more than 1/16” from pulley edge	1
3	Touch straight edge here (two places)	2
4	Pulley	1
5	Straight edge	2
6	The straight edge must be no more than 1/16” from pulley edge	1
7	Touch straight edge here	2

Tension Drive Belt

Tighten one HHCS a few turns then tighten the other HHCS a few turns using a 1/2” socket wrench. Alternate until both HHCS are secure.

NOTE: Verify that both pulleys are aligned properly using a straight edge. The straight edge must be no more than 1/16” from pulley edge.

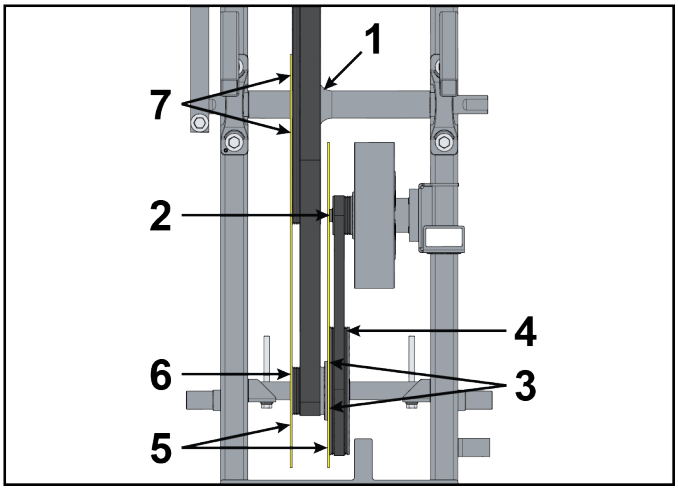

Item	Description	Qty.
1	Pulley	1
2	The straight edge must be no more than 1/16” from pulley edge	1
3	Touch straight edge here (two places)	2
4	Pulley	1
5	Straight edge	2
6	The straight edge must be no more than 1/16” from pulley edge	1
7	Touch straight edge here	2

Install shrouds

1. Place both shrouds in position.

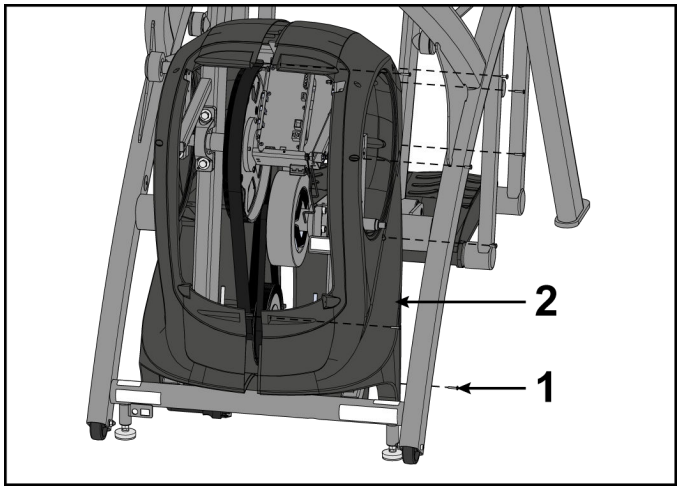

Item	Description	Qty.
1	Screw	7
2	Left shroud	1

2. Install screws securing each side cover using a long Phillips screwdriver.

Install crank covers

1. Inspect crank arm mounting. Crank arm should be flush with crank shaft. Adjust with 9/16” socket wrench if needed.

   NOTE: Crank shaft bolt must be tightened to 30 ft-lbs (40.67 Nm).

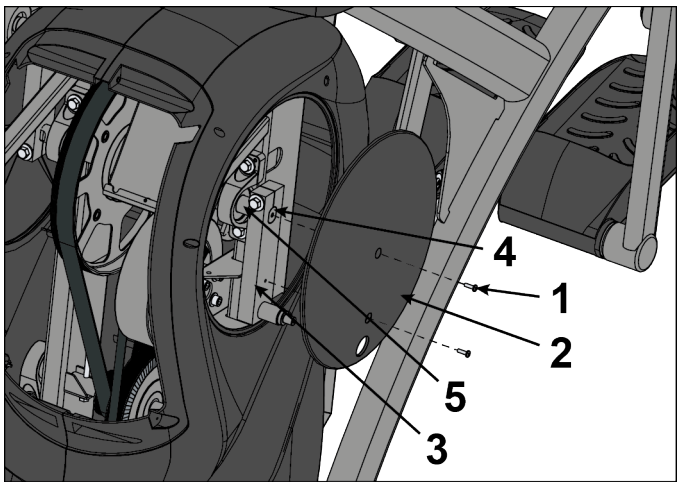

Item	Description	Qty.
1	Screw, Pan head Phillips 10/32 x .62	2
2	Crank cover	1
3	Crank arm	1
4	Flush mount	1
5	Crank shaft	1

2. Place each crank cover in position.
3. Place Loctite® #242 on screws securing crank covers.
4. Install screws securing each crank cover in place using a Phillips screwdriver.

Install linkage rod

1. Install linkage rod on crank arm.

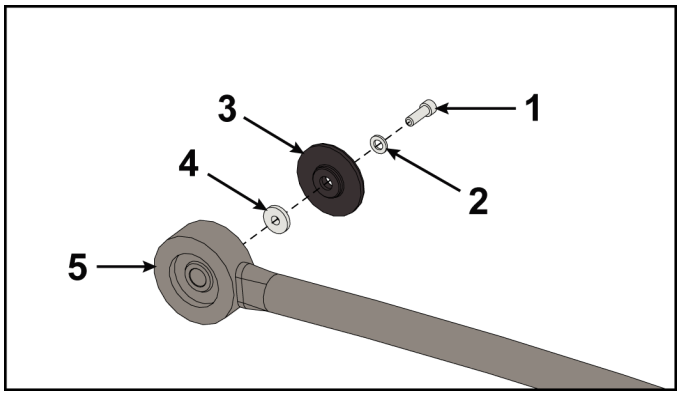

Item	Description	Qty.
1	Screw, SHCS .250-20 x .75	1
2	Flat washer	1
3	Cap	1
4	Spacer	1
5	Linkage rod	1

2. Place a drop of Loctite® #242 on SHCS and place another drop of Loctite® #242 into threads of shaft.
3. Install SHCS, flat washer, cap and spacer using a 3/16" Allen wrench.

   NOTE: SHCS must be tightened to a minimum of 90 in-lbs (10.16 Nm).

Install front access cover

Do not over tighten screws.

1. Place front access cover in place.

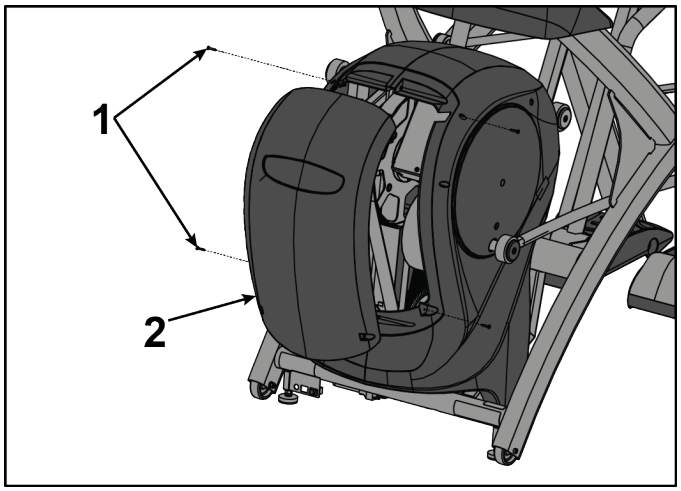

Item	Description	Qty.
1	Screw	4
2	Front access cover	1

2. Install screws using a Phillips screwdriver.

Plug in power cord

Plug power cord into power outlet.

Complete Installation

Operate unit at all levels to verify proper operation.

Pulley and Crank Shaft

Tools Required:

- 3/16” Allen wrench
- 7/32” Allen wrench
- 1/2” Socket wrench
- 9/16” Socket wrench
- Clean cloth (2)
- 9/16” Open end wrench
- Torque wrench, 7/32" Allen wrench
- Torque wrench, 9/16" socket
- Phillips screwdriver
- Long Phillips screwdriver
- Hammer
- Straight edge

Time:

60 minutes

Incline Unit

Incline unit to maximum incline. This allows for better access during servicing.

Disconnect power source

Unplug power cord from power outlet.

WARNING: Shock and electrocution hazard.

- Unplug unit and let sit 10 minutes before cleaning or performing maintenance.
- Electrical charge can remain in unit after unplugging.
- Keep water and liquids away from electrical parts.

Remove front access cover

1. Remove screws securing front access cover using a Phillips screwdriver.

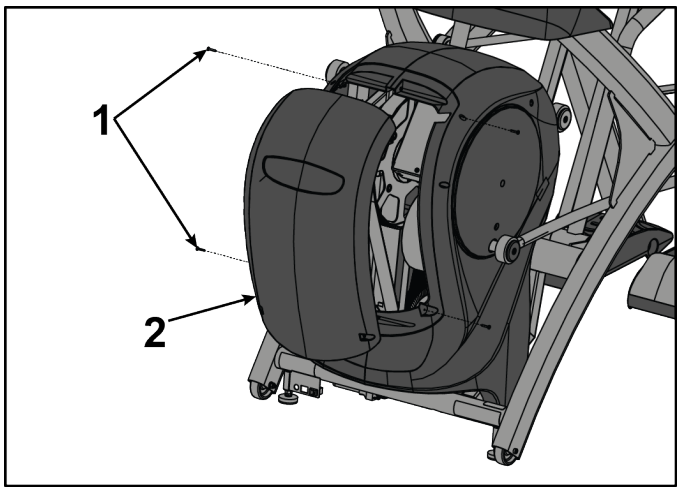

Item	Description	Qty.
1	Screw	4
2	Front access cover	1

2. Remove access cover.

WARNING: Burn hazard.

Do not touch flywheel until cool.

Remove linkage rods

1. Remove socket head cap screw (SHCS), flat washer, cap and spacer securing linkage rod using a 3/16” Allen wrench.

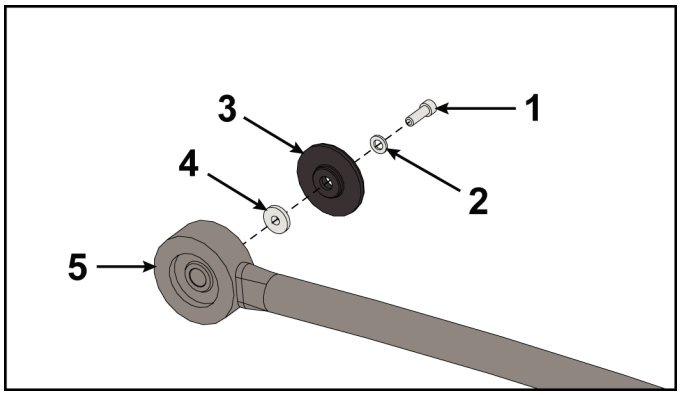

Item	Description	Qty.
1	Screw, SHCS .250-20 x .75	1
2	Flat washer	1
3	Cap	1
4	Spacer	1
5	Linkage rod	1

2. Lay linkage rod down on frame. Place a clean cloth in between linkage rod and frame to prevent scratches.
3. Repeat steps 1 and 2 for other linkage rod.

Remove crank covers

1. Remove both screws securing crank cover using a Phillips screwdriver.

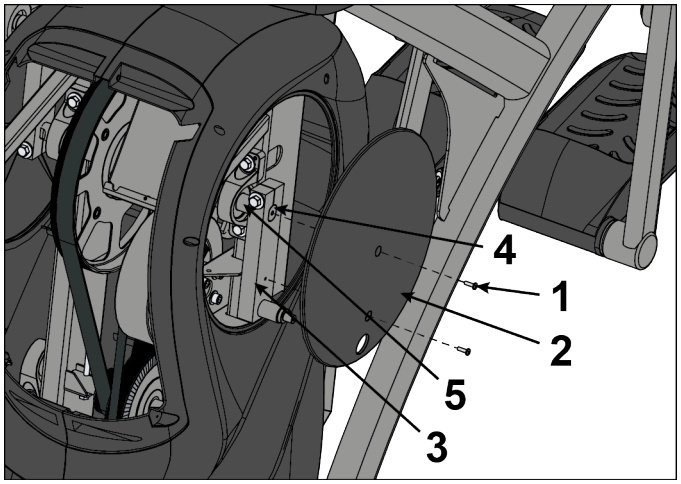

Item	Description	Qty.
1	Screw, Pan head Phillips 10/32 x .62	2
2	Crank cover	1
3	Crank arm	1
4	Flush mount	1
5	Crank shaft	1

2. Remove crank cover.
3. Repeat steps for other crank cover.

Remove crank arms

1. Loosen but do not remove HHCS on each crank arm using a 9/16” socket wrench.

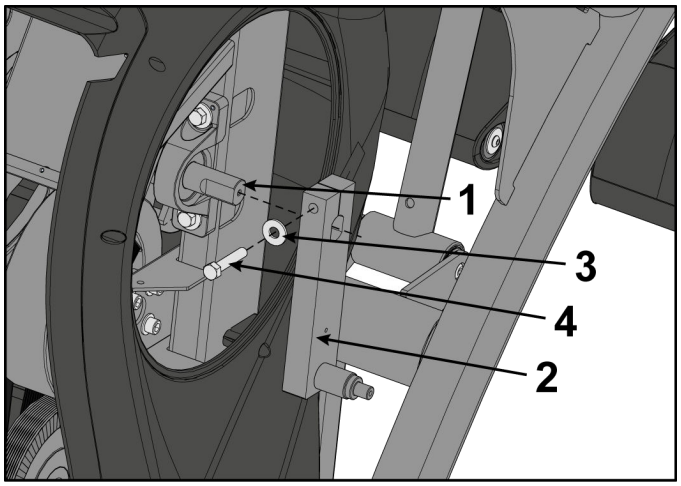

Item	Description	Qty.
1	Crank arm shaft	1
2	Crank arm	2
3	Washer	2
4	HHCS	2

2. Remove crank arms from crank arm shaft.

Remove shrouds

1. Remove seven screws securing left shroud in place using a long Phillips screwdriver.

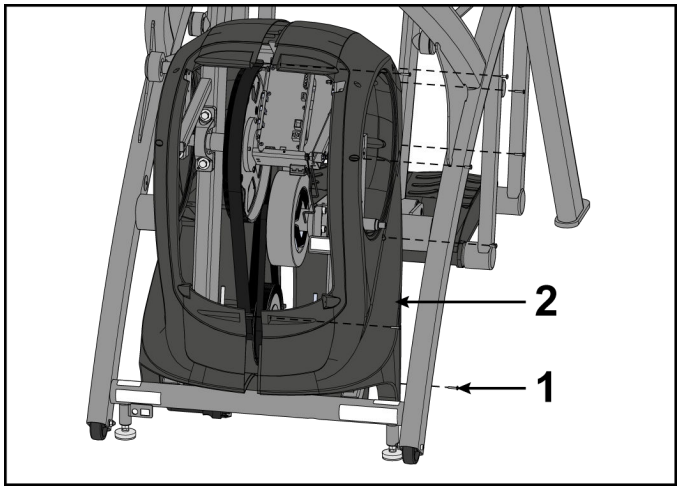

Item	Description	Qty.
1	Screw	7
2	Left shroud	1

2. Remove three screws securing right shroud in place using a long Phillips screwdriver.
3. Remove both shrouds.

Release Drive Belt Tension

Loosen the two Hex Head Cap Screws (HHCS) using a 1/2” socket wrench. Alternate a few turns to each HHCS until they bottom out (DO NOT REMOVE).

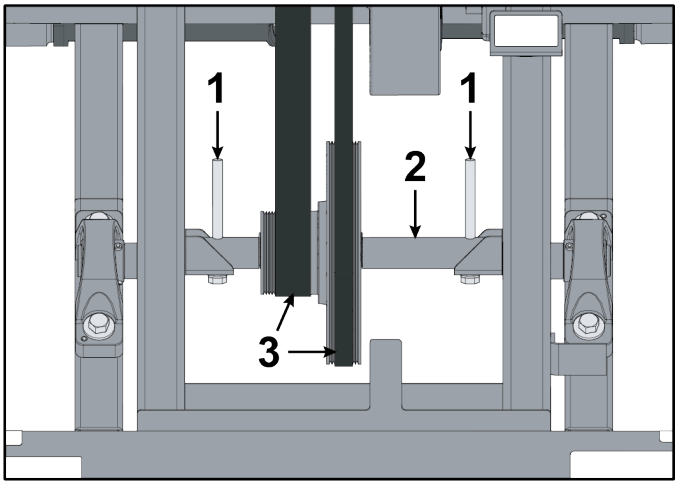

Item	Description	Qty.
1	HHCS	2
2	Lower pivot shaft	1
3	Drive belt	2

Remove crank shaft assembly

1. Remove the four bolts, eight flat washers and four nuts securing crank shaft assembly to frame using a 9/16” socket wrench and a 9/16” open end wrench.

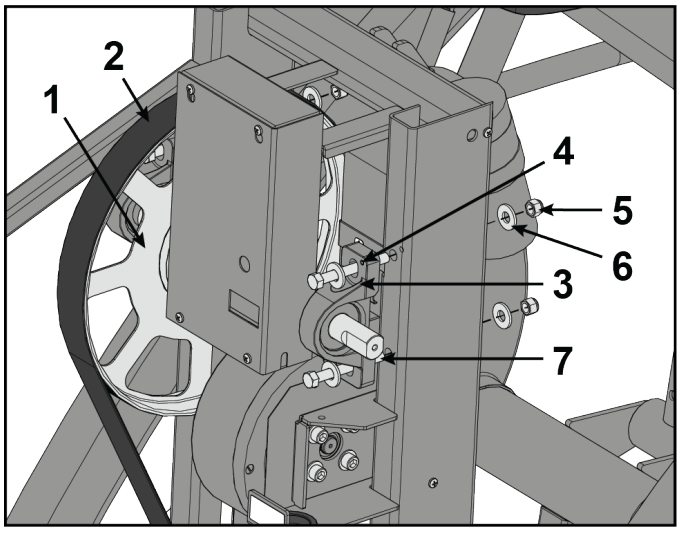

Item	Description	Qty.
1	Crank shaft assembly	1
2	Primary belt	1
3	Pillow block	2
4	Alignment pin	1
5	Nut	4
6	Flat washer	8
7	Bolt	4

2. Remove primary belt from crank shaft assembly.
3. Remove crank shaft assembly.

Install crank shaft assembly

The new bearings have been pre-assembled on the new crank shaft assembly and are not adjustable.

1. Place assembly into primary belt and slide alignment pins into holes on the frame.
   You may need to tap the pins in with a hammer so they are flush with the top of pillow blocks.

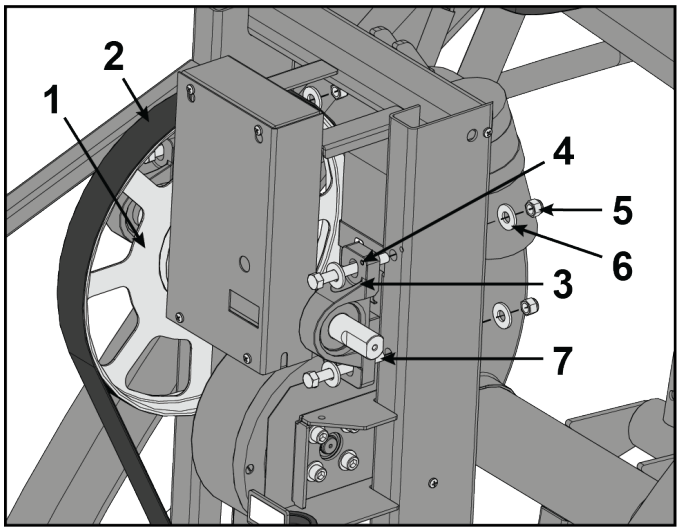

Item	Description	Qty.
1	Crank shaft assembly	1
2	Primary belt	1
3	Pillow block	2
4	Alignment pin	1
5	Nut	4
6	Flat washer	8
7	Bolt	4

2. Secure two bolts, four flat washers, and two nuts to each pillow block using a 9/16” socket wrench and a 9/16” open end wrench.

Tension Drive Belt

Tighten one HHCS a few turns then tighten the other HHCS a few turns using a 1/2” socket wrench. Alternate until both HHCS are secure.

NOTE: Verify that both pulleys are aligned properly using a straight edge. The straight edge must be no more than 1/16” from pulley edge.

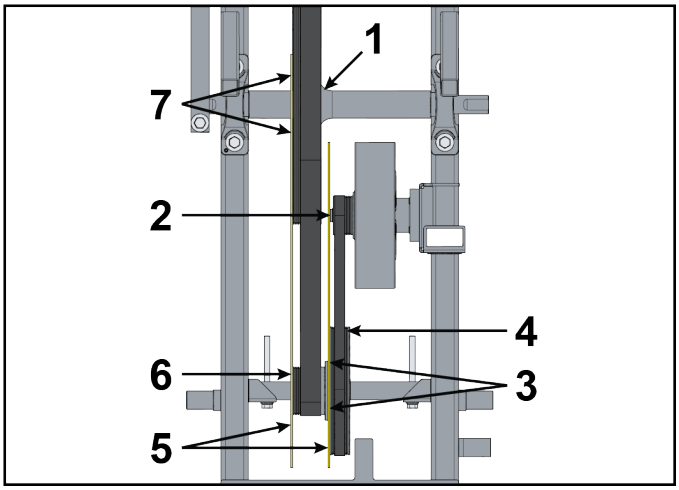

Item	Description	Qty.
1	Pulley	1
2	The straight edge must be no more than 1/16” from pulley edge	1
3	Touch straight edge here (two places)	2
4	Pulley	1
5	Straight edge	2
6	The straight edge must be no more than 1/16” from pulley edge	1
7	Touch straight edge here	2

Install shrouds

1. Place both shrouds in position.

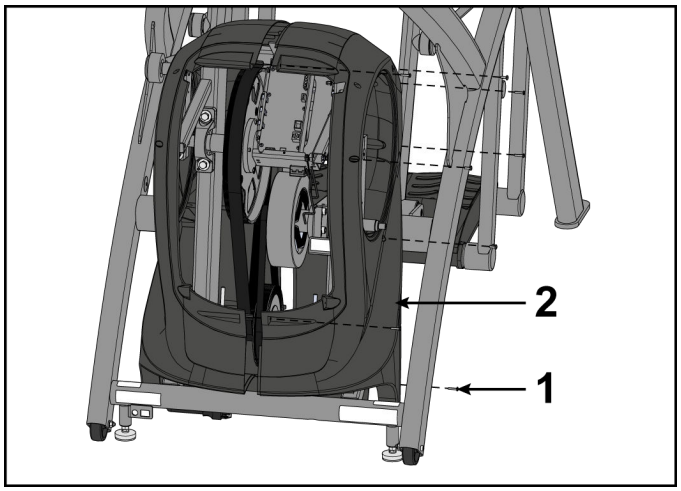

Item	Description	Qty.
1	Screw	7
2	Left shroud	1

2. Install screws securing each side cover using a long Phillips screwdriver.

Install crank arms

1. Slide each crank arm in place.

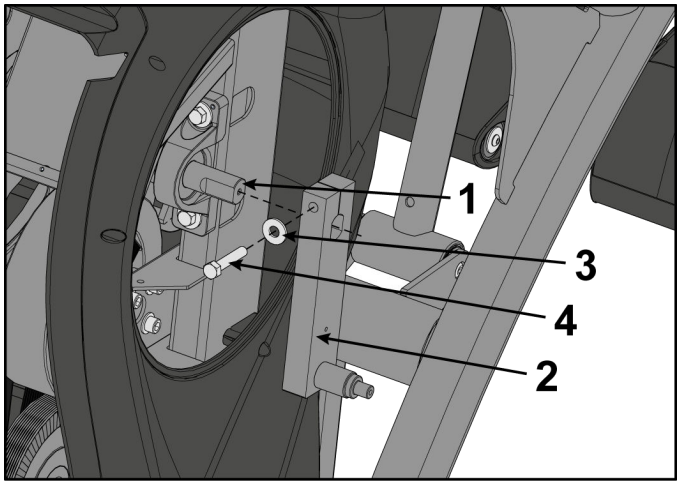

Item	Description	Qty.
1	Crank arm shaft	1
2	Crank arm	2
3	Washer	2
4	HHCS	2

The face of each crank arm should be flush with the end of each shaft.

2. Tighten HHCS on each crank arm using a torque wrench with 9/16” socket.

NOTE: HHCS must be tightened to a minimum of 30 lbs-ft.

If HHCS is not tightened properly, there may be to much movement of crank arms or foot plates during operation.

Install crank covers

1. Inspect crank arm mounting. Crank arm should be flush with crank shaft. Adjust with 9/16” socket wrench if needed.

   NOTE: Crank shaft bolt must be tightened to 30 ft-lbs (40.67 Nm).

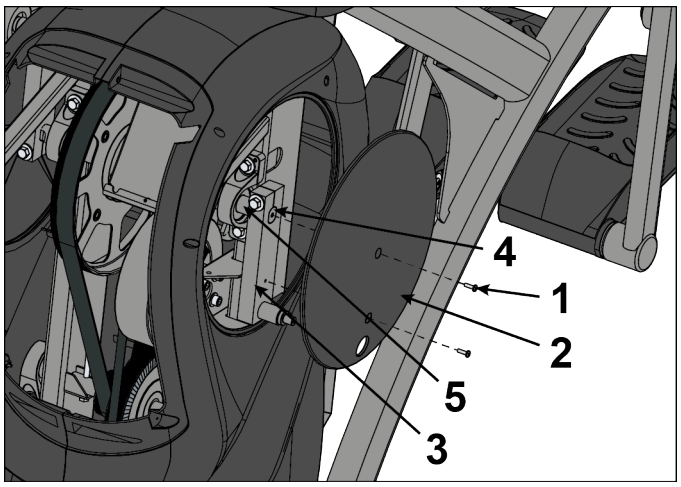

Item	Description	Qty.
1	Screw, Pan head Phillips 10/32 x .62	2
2	Crank cover	1
3	Crank arm	1
4	Flush mount	1
5	Crank shaft	1

2. Place each crank cover in position.
3. Place Loctite® #242 on screws securing crank covers.
4. Install screws securing each crank cover in place using a Phillips screwdriver.

Install linkage rods

1. Install linkage rod on crank arm.

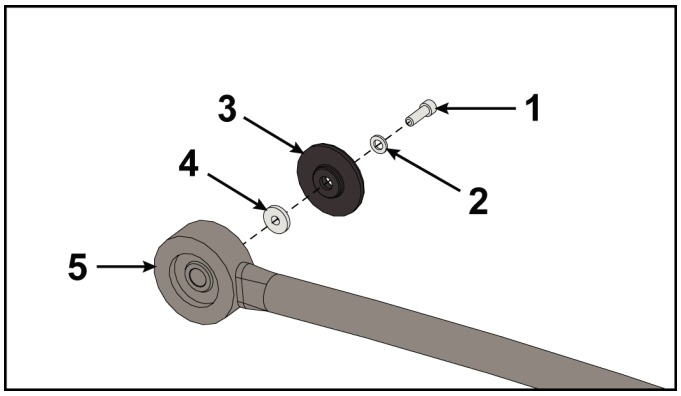

Item	Description	Qty.
1	Screw, SHCS .250-20 x .75	1
2	Flat washer	1
3	Cap	1
4	Spacer	1
5	Linkage rod	1

2. Place a drop of Loctite® #242 on SHCS and place another drop of Loctite® #242 into threads of shaft.
3. Install SHCS, flat washer, cap and spacer using a 3/16" Allen wrench.

   NOTE: SHCS must be tightened to a minimum of 90 in-lbs (10.16 Nm).
4. Repeat steps for other linkage rod.

Install front access cover

Do not over tighten screws.

1. Place front access cover in place.

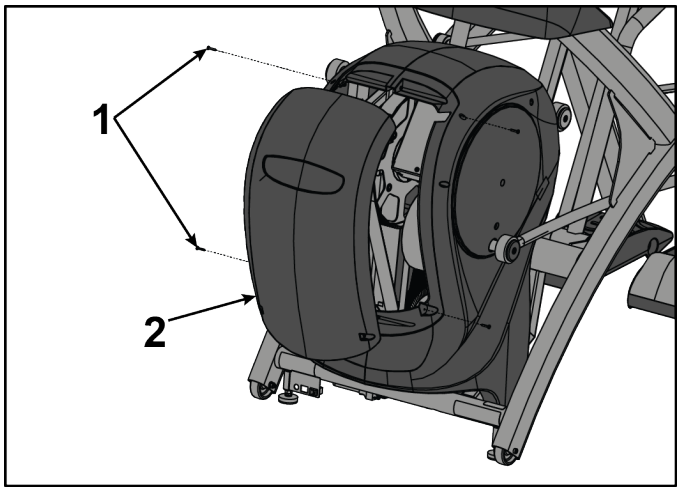

Item	Description	Qty.
1	Screw	4
2	Front access cover	1

2. Install screws using a Phillips screwdriver.

Plug in power cord

Plug power cord into power outlet.

Complete Installation

Operate unit at all levels to verify proper operation.

Front Foot Plate Arm

Tools Required:

- Phillips screwdriver
- 3/16” Allen wrench
- 5/32” Allen wrench
- 7/32” Allen wrench
- Torque wrench
- Rubber mallet

Time:
30 minutes

Disconnect power source

Unplug power cord from power outlet.

WARNING: Shock and electrocution hazard.

- Unplug unit and let sit 10 minutes before cleaning or performing maintenance.
- Electrical charge can remain in unit after unplugging.
- Keep water and liquids away from electrical parts.

Remove front arm handle linkage

1. Remove screw, flat washer, cap, and spacer securing arm handle linkage using a 3/16” Allen wrench.

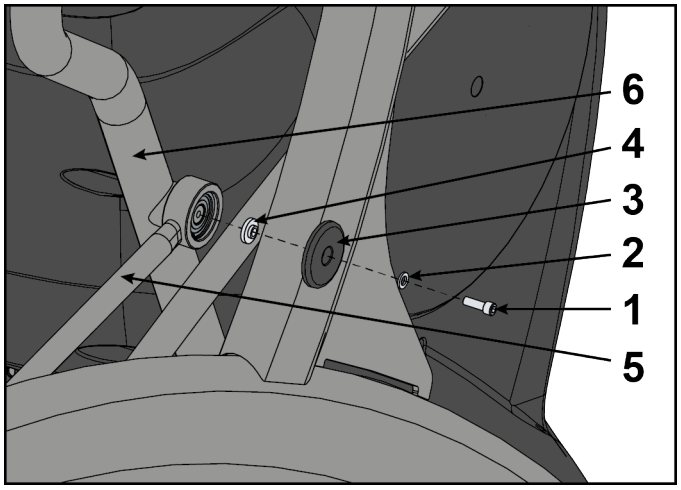

	Description	Qty.
1	Screw	1
2	Flat washer	1
3	Cap	1
4	Spacer	1
5	Arm handle linkage	1
6	Handle	1

2. Remove arm handle linkage from handle.

Remove foot plate assembly

1. Remove both SHCS and washers securing foot plate using a 5/32” Allen wrench.

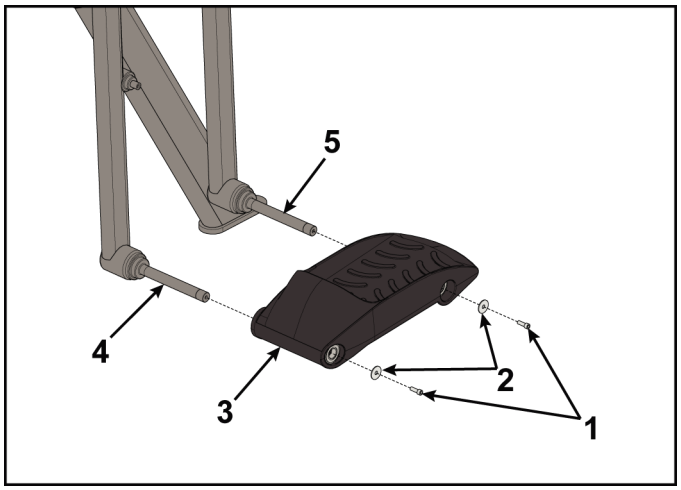

Item	Description	Qty.
1	SHCS	2
2	Washer	2
3	Foot plate	1
4	Front foot plate shaft	1
5	Rear foot plate shaft	1

2. Remove foot plate from front and rear foot plate shafts.

Remove Side Covers - Lower Body

1. Open gasket and remove from side handle.

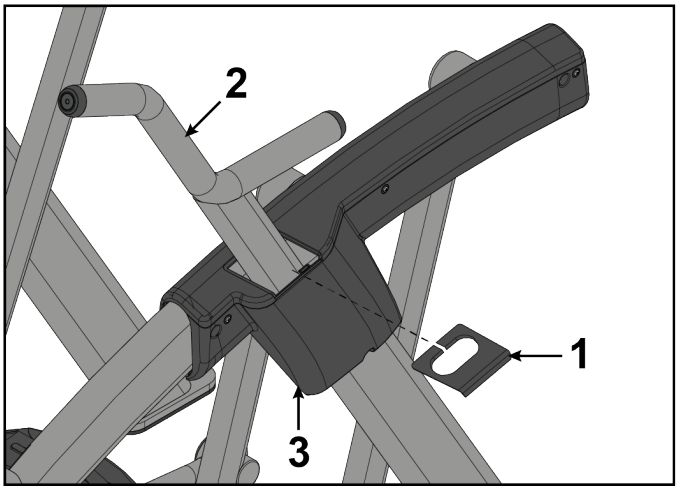

Item	Description	Qty
1	Gasket	1
2	Side Handle, Left	1
3	Cover, Rear, Lower, Left	1

2. Remove screws securing top side cover to frame using a Phillips screwdriver.
3. Remove screws from grommets securing bottom side cover to top side cover using a Phillips screwdriver.

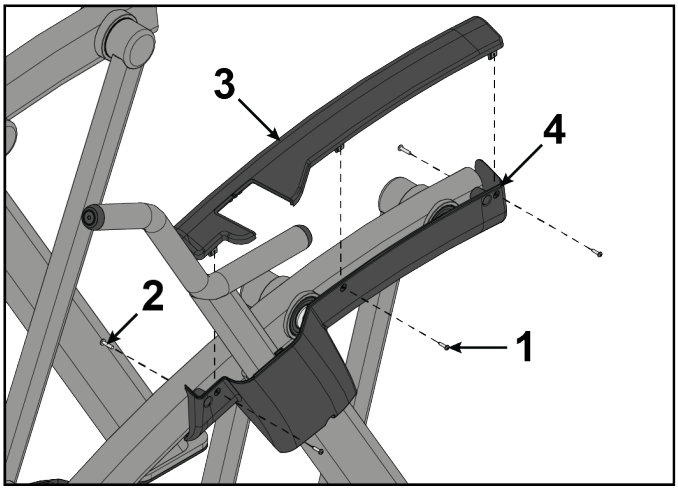

Item	Description	Qty
1	Screw, Pan Head Phillips, M4.2 x 0.7 x 19	3
2	Screw, Pan Head Phillips, 10-24 x .75"	2
3	Side Cover, Top	1
4	Side Cover, Bottom	1

4. Remove screws securing bottom side cover to frame using a Phillips screwdriver.

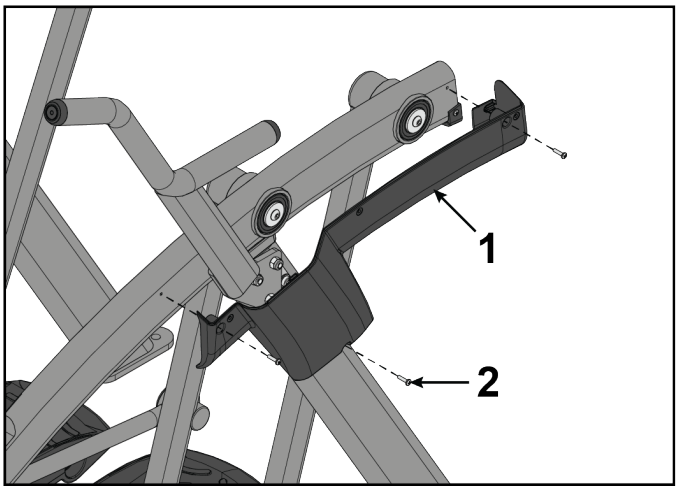

Item	Description	Qty
1	Side Cover, Bottom	1
2	Screw, Pan Head Phillips, 10-24 x .75"	3

Remove Side Covers - Total Body

1. Remove screws securing top side cover to frame using a Phillips screwdriver.
2. Remove screws from grommets securing bottom side cover to top side cover using a Phillips screwdriver.

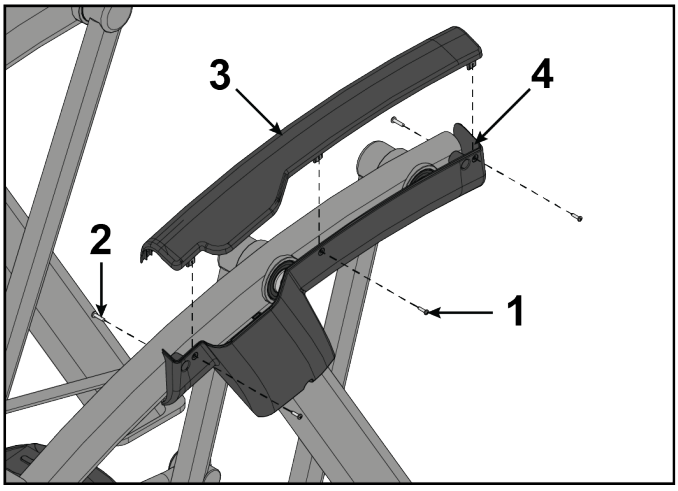

Item	Description	Qty
1	Screw, Pan Head Phillips, M4.2 x 0.7 x 19	3
2	Screw, Pan Head Phillips, 10-24 x .75"	2
3	Side Cover, Top	1
4	Side Cover, Bottom	1

3. Remove screws securing bottom side cover to frame using a Phillips screwdriver.

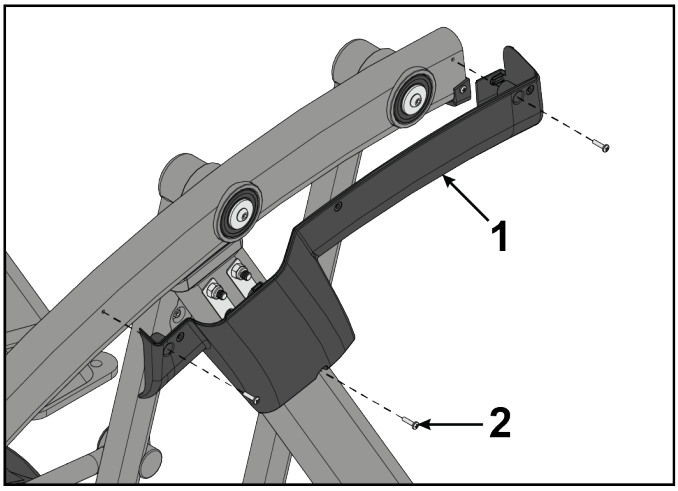

Item	Description	Qty
1	Side Cover, Bottom	1
2	Screw, Pan Head Phillips, 10-24 x .75"	3

Remove front foot plate arm

1. Remove Button Head Socket Cap Screw (BHSCS) and washer securing front foot plate arm using a 7/32” Allen wrench.

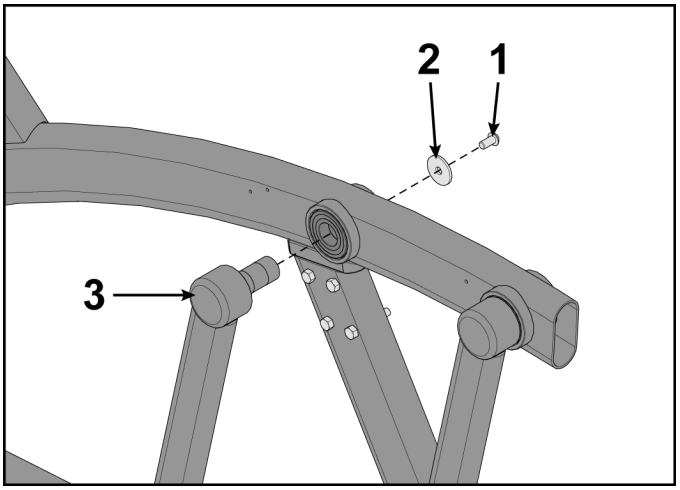

Item	Description	Qty.
1	BHSCS	1
2	Washer	1
3	Front foot plate arm	1

2. Remove front foot plate arm using a rubber mallet.

Install front foot plate arm

1. Position front foot plate arm in place.

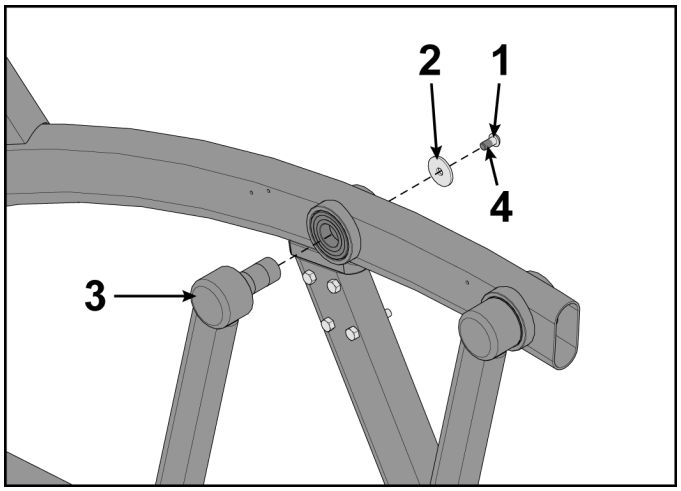

Item	Description	Qty.
1	BHSCS	1
2	Washer	1
3	Front foot plate arm	1
4	Loctite® #242	1

2. Place a drop of Loctite on the BHSCS and another drop inside the shaft into where the BHSCS will be tightened.
3. Install BHSCS and washer to front foot plate arm using a 7/32” Allen wrench.

   BHSCS must be tightened to a minimum of 250 lbs-in.

Install Side Covers - Lower Body

1. Install screws securing bottom side cover to frame using a Phillips screwdriver.

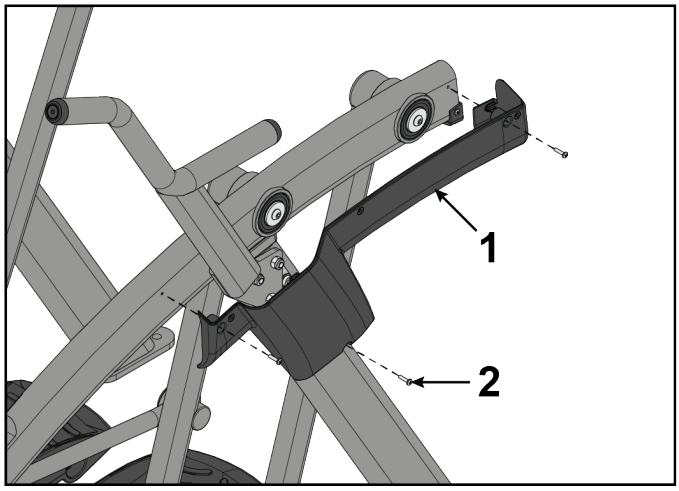

Item	Description	Qty
1	Side Cover, Bottom	1
2	Screw, Pan Head Phillips, 10-24 x .75"	3

2. Install grommets to top side cover.

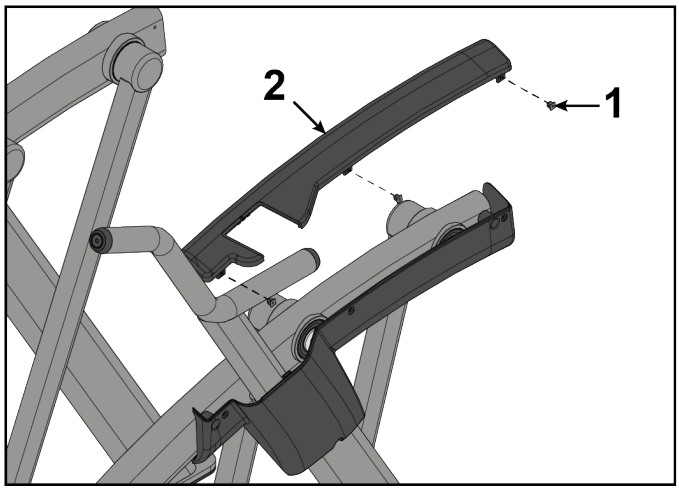

Item	Description	Qty
1	Grommet, Nylon	3
2	Side Cover, Top	1

3. Install screws into grommets securing bottom side cover to top side cover using a Phillips screwdriver.

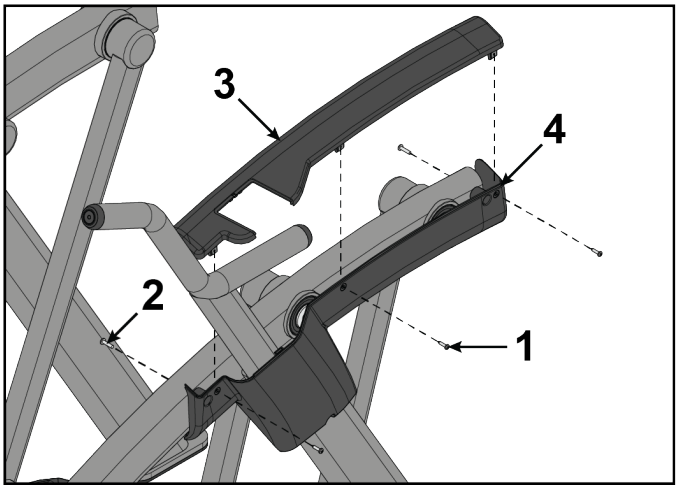

Item	Description	Qty
1	Screw, Pan Head Phillips, M4.2 x 0.7 x 19	3
2	Screw, Pan Head Phillips, 10-24 x .75"	2
3	Side Cover, Top	1
4	Side Cover, Bottom	1

4. Install screws securing top side cover to frame using a Phillips screwdriver.
5. Open gasket and install around side handle. Press gasket down onto bottom side cover.

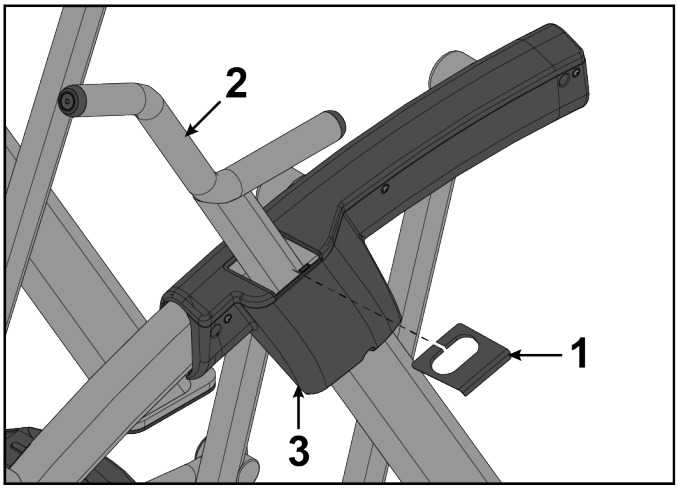

Item	Description	Qty
1	Gasket	1
2	Side Handle, Left	1
3	Cover, Rear, Lower, Left	1

Install Side Covers - Total Body

1. Install screws securing bottom side cover to frame using a Phillips screwdriver.

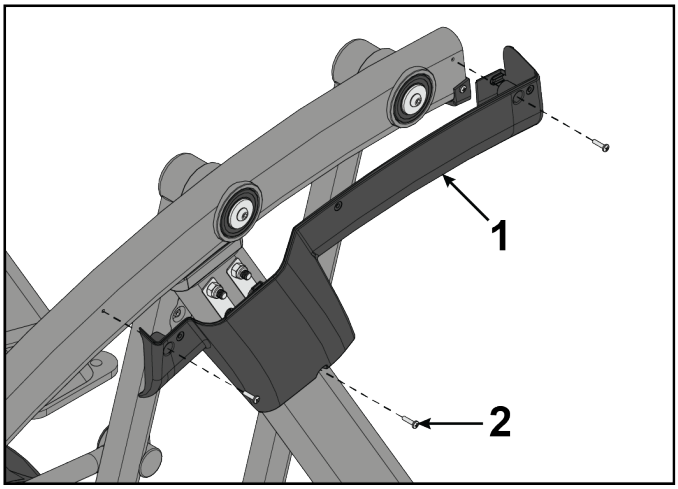

Item	Description	Qty
1	Side Cover, Bottom	1
2	Screw, Pan Head Phillips, 10-24 x .75"	3

2. Install grommets to top side cover.

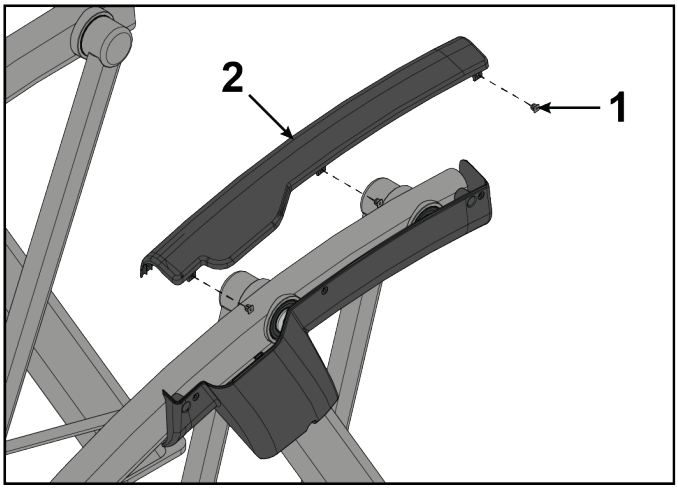

Item	Description	Qty
1	Grommet, Nylon	3
2	Side Cover, Top	1

3. Install screws into grommets securing bottom side cover to top side cover using a Phillips screwdriver.

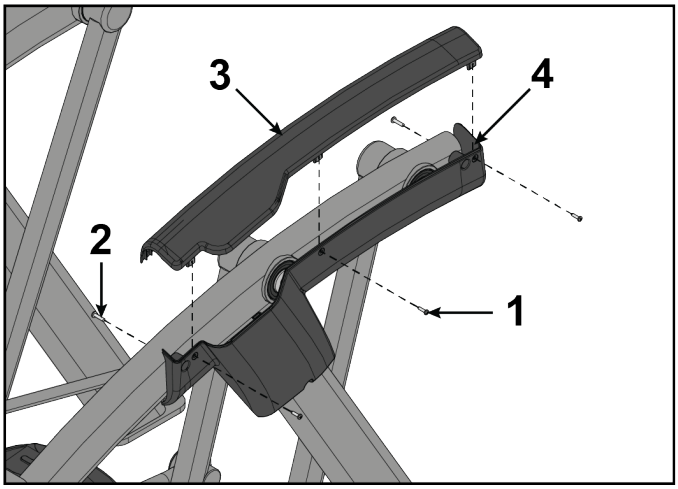

Item	Description	Qty
1	Screw, Pan Head Phillips, M4.2 x 0.7 x 19	3
2	Screw, Pan Head Phillips, 10-24 x .75"	2
3	Side Cover, Top	1
4	Side Cover, Bottom	1

4. Install screws securing top side cover to frame using a Phillips screwdriver.

Install foot plate assembly

1. Slide foot plate onto the foot plate shafts.

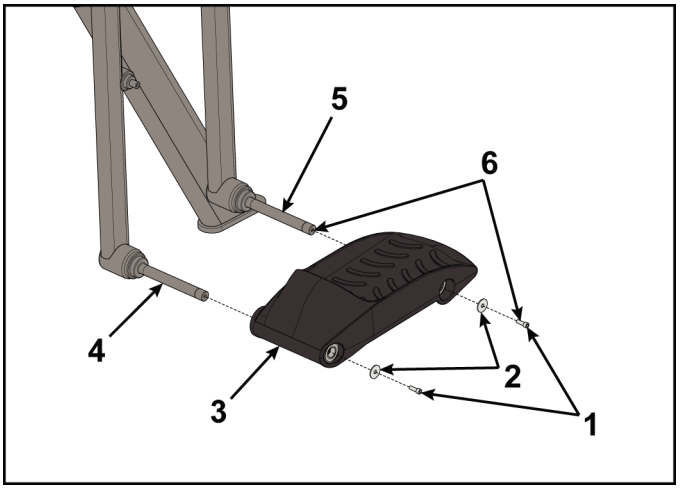

Item	Description	Qty.
1	SHCS	2
2	Washer	2
3	Foot plate	1
4	Front foot plate shaft	1
5	Rear foot plate shaft	1
6	Loctite® #242	1

2. Place a drop of loctite on each SHCS.

   Place another drop of loctite in each shaft (where the SHCS will be tightened into).
3. Install both washers and both SHCS using a 5/32” Allen wrench.

Install front arm handle linkage

1. Install arm handle linkage to handle.

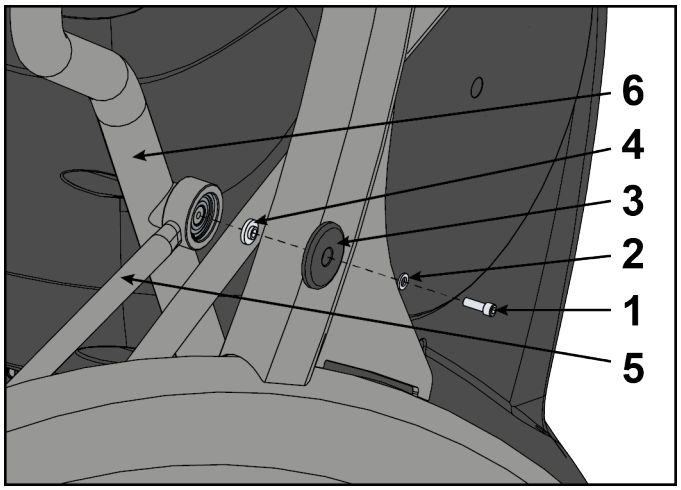

	Description	Qty.
1	Screw	1
2	Flat washer	1
3	Cap	1
4	Spacer	1
5	Arm handle linkage	1
6	Handle	1

2. Place a drop of loctite on threads of screw.
3. Place another drop of loctite into the threads of the shaft.
4. Install screw, flat washer, cap, and spacer securing the arm handle linkage using a 3/16” Allen wrench.

   NOTE: Screw must be tightened to a minimum of 90 lbs-in.

Plug in power cord

Plug power cord into power outlet.

Complete Installation

Operate unit at all levels to verify proper operation.

Rear Foot Plate Arm

Tools Required:

- Phillips screwdriver
- 3/16” Allen wrench
- 5/32” Allen wrench
- 7/32” Allen wrench
- Torque wrench
- Rubber mallet

Time:
30 minutes

Disconnect power source

Unplug power cord from power outlet.

WARNING: Shock and electrocution hazard.

- Unplug unit and let sit 10 minutes before cleaning or performing maintenance.
- Electrical charge can remain in unit after unplugging.
- Keep water and liquids away from electrical parts.

Remove front arm handle linkage

1. Remove screw, flat washer, cap, and spacer securing arm handle linkage using a 3/16” Allen wrench.

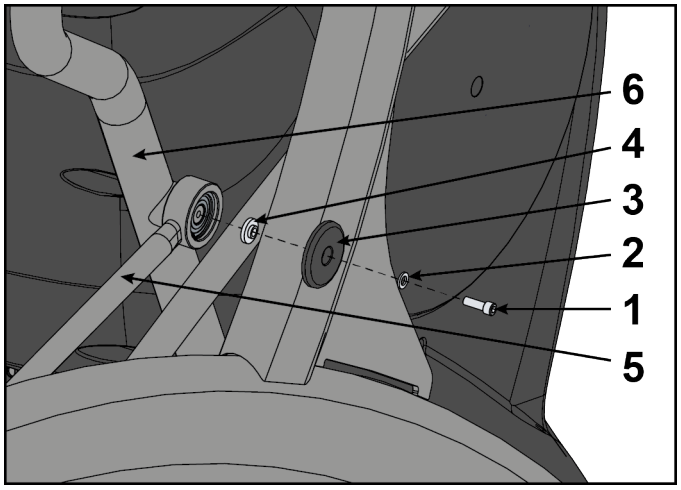

	Description	Qty.
1	Screw	1
2	Flat washer	1
3	Cap	1
4	Spacer	1
5	Arm handle linkage	1
6	Handle	1

2. Remove arm handle linkage from handle.

Remove foot plate assembly

1. Remove both SHCS and washers securing foot plate using a 5/32” Allen wrench.

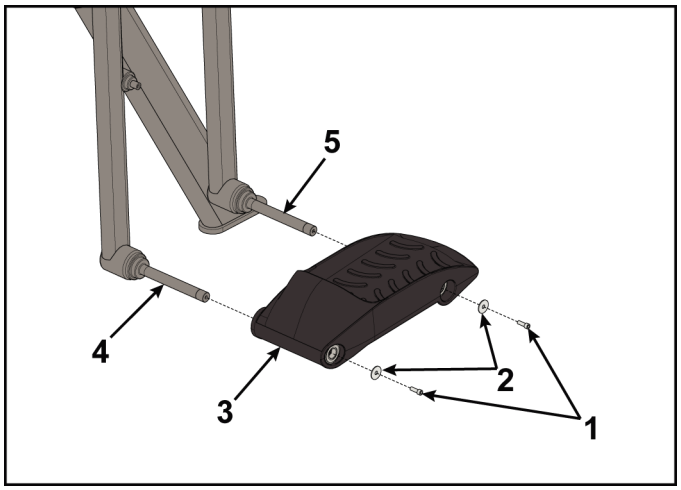

Item	Description	Qty.
1	SHCS	2
2	Washer	2
3	Foot plate	1
4	Front foot plate shaft	1
5	Rear foot plate shaft	1

2. Remove foot plate from front and rear foot plate shafts.

Remove Side Covers - Lower Body

1. Open gasket and remove from side handle.

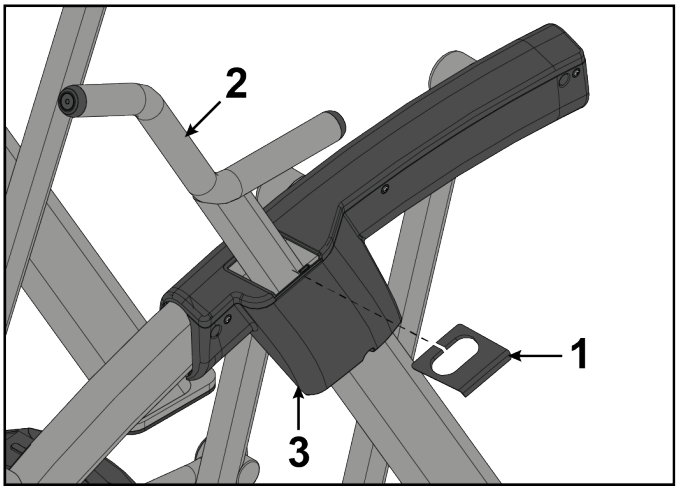

Item	Description	Qty
1	Gasket	1
2	Side Handle, Left	1
3	Cover, Rear, Lower, Left	1

2. Remove screws securing top side cover to frame using a Phillips screwdriver.
3. Remove screws from grommets securing bottom side cover to top side cover using a Phillips screwdriver.

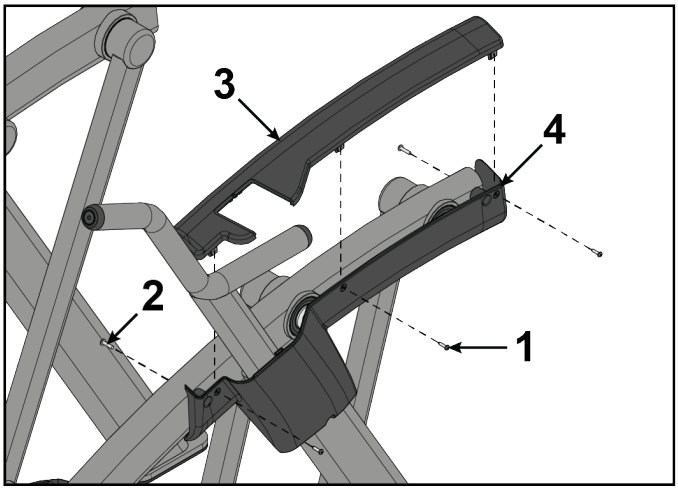

Item	Description	Qty
1	Screw, Pan Head Phillips, M4.2 x 0.7 x 19	3
2	Screw, Pan Head Phillips, 10-24 x .75"	2
3	Side Cover, Top	1
4	Side Cover, Bottom	1

4. Remove screws securing bottom side cover to frame using a Phillips screwdriver.

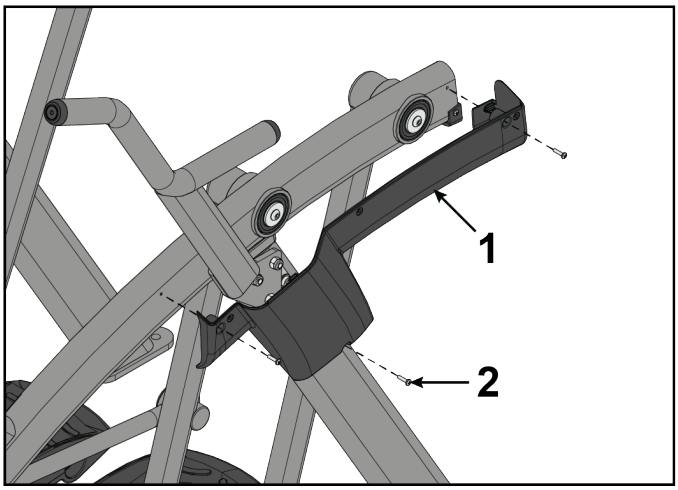

Item	Description	Qty
1	Side Cover, Bottom	1
2	Screw, Pan Head Phillips, 10-24 x .75"	3

Remove Side Covers - Total Body

1. Remove screws securing top side cover to frame using a Phillips screwdriver.
2. Remove screws from grommets securing bottom side cover to top side cover using a Phillips screwdriver.

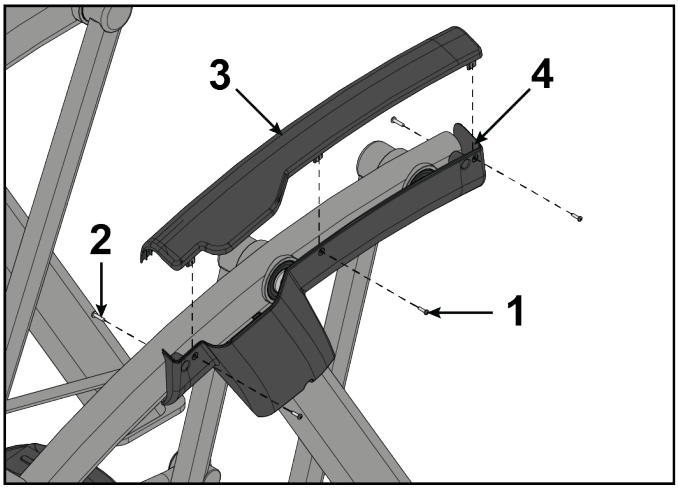

Item	Description	Qty
1	Screw, Pan Head Phillips, M4.2 x 0.7 x 19	3
2	Screw, Pan Head Phillips, 10-24 x .75"	2
3	Side Cover, Top	1
4	Side Cover, Bottom	1

3. Remove screws securing bottom side cover to frame using a Phillips screwdriver.

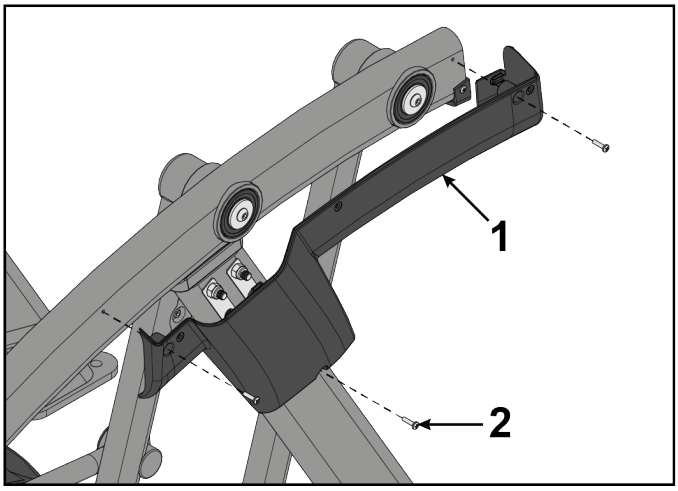

Item	Description	Qty
1	Side Cover, Bottom	1
2	Screw, Pan Head Phillips, 10-24 x .75"	3

Remove rear foot plate arm

1. Remove BHSCS and washer securing rear foot plate arm using a 7/32” Allen wrench.

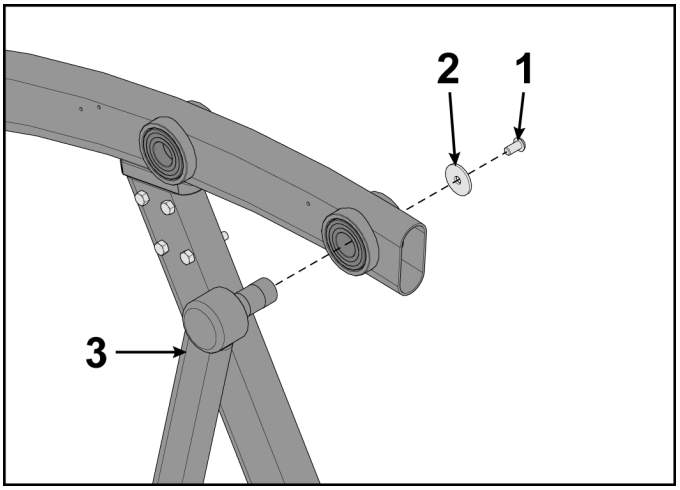

Item	Description	Qty.
1	BHSCS	1
2	Washer	1
3	Rear foot plate arm	1

2. Remove rear foot plate arm using a rubber mallet.

Install rear foot plate arm

1. Position rear foot plate arm in place.

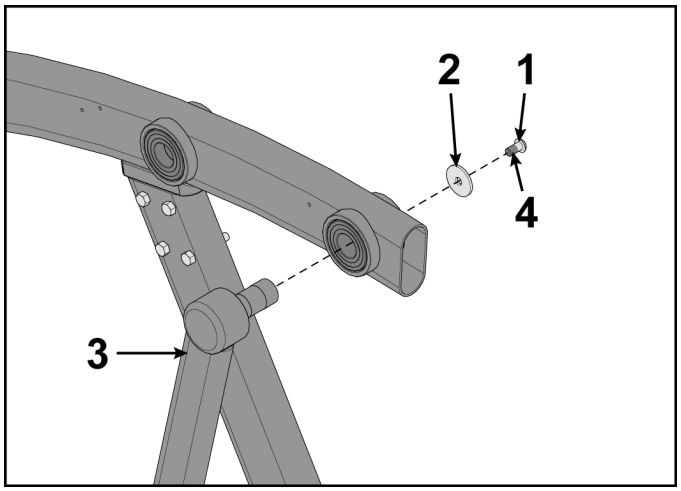

Item	Description	Qty.
1	BHSCS	1
2	Washer	1
3	Rear foot plate arm	1
4	Loctite® #242	1

2. Place a drop of Loctite on the BHSCS and another drop inside the shaft into where the BHSCS will be tightened.
3. Install BHSCS and washer to rear foot plate arm using a 7/32” Allen wrench.

   NOTE: BHSCS must be tightened to a minimum of 250 lbs-in.

Install Side Covers - Lower Body

1. Install screws securing bottom side cover to frame using a Phillips screwdriver.

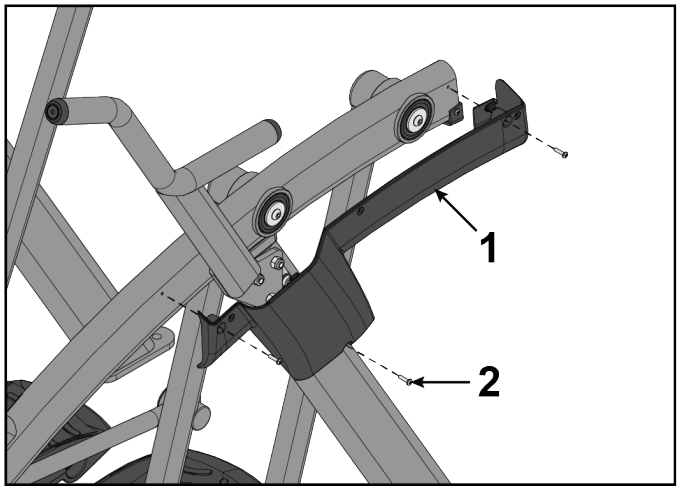

Item	Description	Qty
1	Side Cover, Bottom	1
2	Screw, Pan Head Phillips, 10-24 x .75"	3

2. Install grommets to top side cover.

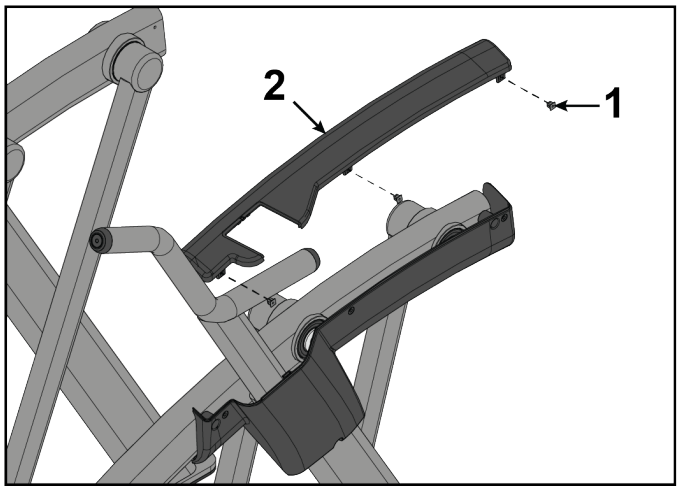

Item	Description	Qty
1	Grommet, Nylon	3
2	Side Cover, Top	1

3. Install screws into grommets securing bottom side cover to top side cover using a Phillips screwdriver.

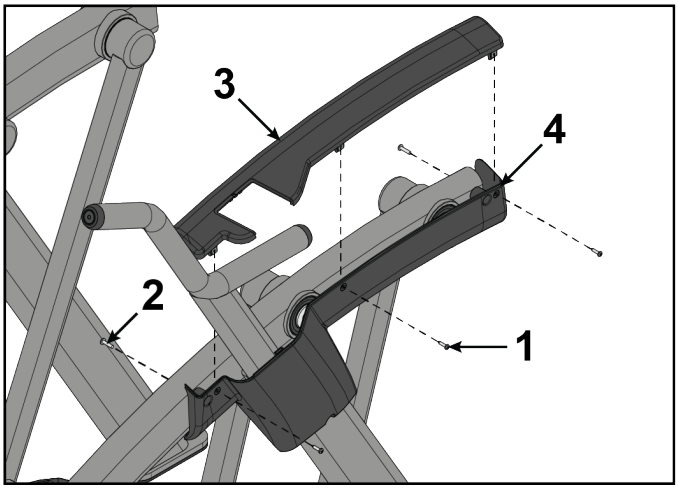

Item	Description	Qty
1	Screw, Pan Head Phillips, M4.2 x 0.7 x 19	3
2	Screw, Pan Head Phillips, 10-24 x .75"	2
3	Side Cover, Top	1
4	Side Cover, Bottom	1

4. Install screws securing top side cover to frame using a Phillips screwdriver.
5. Open gasket and install around side handle. Press gasket down onto bottom side cover.

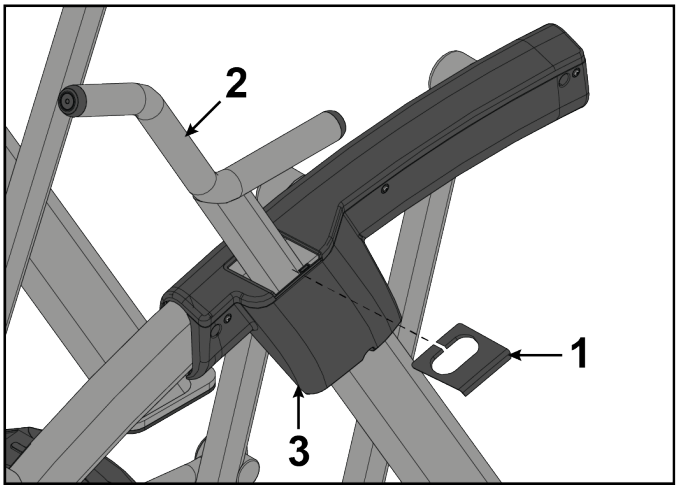

Item	Description	Qty
1	Gasket	1
2	Side Handle, Left	1
3	Cover, Rear, Lower, Left	1

Install Side Covers - Total Body

1. Install screws securing bottom side cover to frame using a Phillips screwdriver.

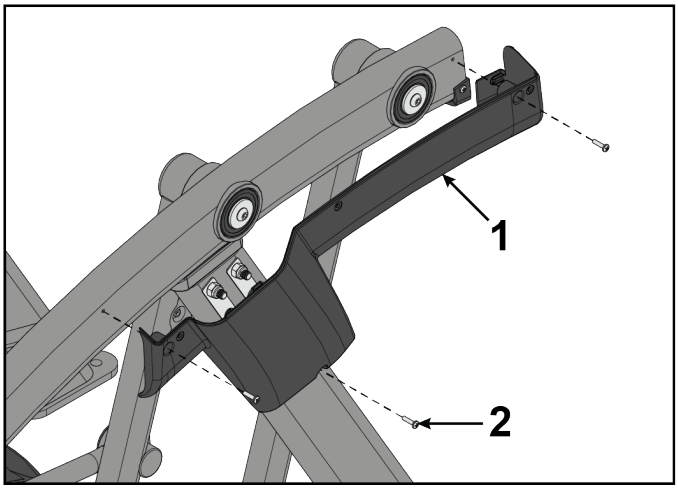

Item	Description	Qty
1	Side Cover, Bottom	1
2	Screw, Pan Head Phillips, 10-24 x .75"	3

2. Install grommets to top side cover.

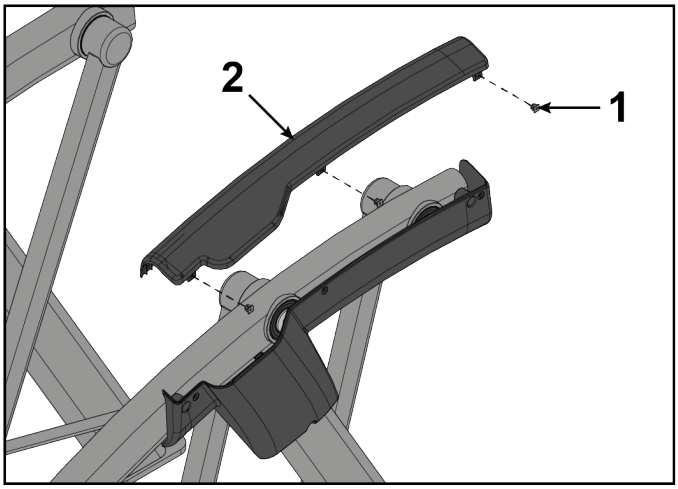

Item	Description	Qty
1	Grommet, Nylon	3
2	Side Cover, Top	1

3. Install screws into grommets securing bottom side cover to top side cover using a Phillips screwdriver.

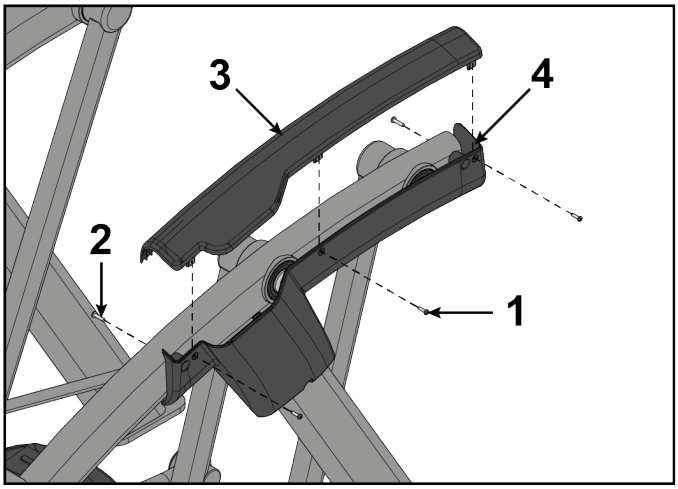

Item	Description	Qty
1	Screw, Pan Head Phillips, M4.2 x 0.7 x 19	3
2	Screw, Pan Head Phillips, 10-24 x .75"	2
3	Side Cover, Top	1
4	Side Cover, Bottom	1

4. Install screws securing top side cover to frame using a Phillips screwdriver.

Install foot plate assembly

1. Slide foot plate onto the foot plate shafts.

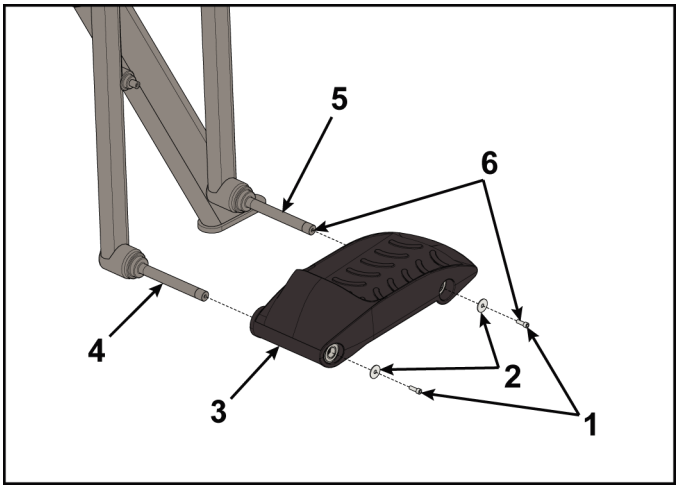

Item	Description	Qty.
1	SHCS	2
2	Washer	2
3	Foot plate	1
4	Front foot plate shaft	1
5	Rear foot plate shaft	1
6	Loctite® #242	1

2. Place a drop of loctite on each SHCS.

   Place another drop of loctite in each shaft (where the SHCS will be tightened into).
3. Install both washers and both SHCS using a 5/32” Allen wrench.

Install front arm handle linkage

1. Install arm handle linkage to handle.

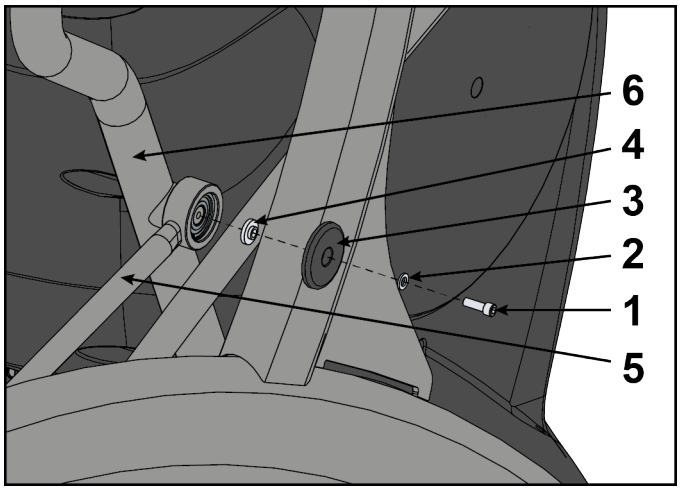

	Description	Qty.
1	Screw	1
2	Flat washer	1
3	Cap	1
4	Spacer	1
5	Arm handle linkage	1
6	Handle	1

2. Place a drop of loctite on threads of screw.
3. Place another drop of loctite into the threads of the shaft.
4. Install screw, flat washer, cap, and spacer securing the arm handle linkage using a 3/16” Allen wrench.

   NOTE: Screw must be tightened to a minimum of 90 lbs-in.

Plug in power cord

Plug power cord into power outlet.

Complete Installation

Operate unit at all levels to verify proper operation.

Troubleshooting

Knowledge Base

See Knowledge Base for more detailed information.

Troubleshooting the Polar® Heart Rate Chest Strap

Heart rate reading is erratic or absent entirely

Probable Cause	Corrective Action
Belt transmitter electrodes are not wet enough to pick up accurate heart rate readings.	Wet the belt transmitter electrodes.
Belt transmitter electrodes are not laying flat against the skin.	Ensure the belt transmitter electrodes are laying flat against the skin.
Belt transmitter needs cleaning.	Wash the belt transmitter with mild soap and water.
Belt transmitter not properly set up.	Setup of the belt transmitter is accomplished by initially bringing it with in 1 foot of the receiver. The receiver is in the console. After the heart rate is displayed on the console the range is extended to 3 feet.
Chest strap battery is depleted.	Contact Customer Support Services for instructions on how to have the chest strap replaced.

Abnormally elevated heart rate readings

Probable Cause	Corrective Action
Electromagnetic interference from television sets and/or antennas.	Move the exercise equipment a few inches away from the probable cause, or move the probable cause a few inches away from the exercise equipment, until the heart rate readings are accurate.
Electromagnetic interference from cell phones.	
Electromagnetic interference from computers.	
Electromagnetic interference from cars.	
Electromagnetic interference from high voltage power lines.	
Electromagnetic interference from motor driven exercise equipment.	

Troubleshooting the Lifepulse™ System Sensors

If the heart rate reading is erratic or missing, do the following:

- Dry the hands if necessary to prevent slipping.
- Apply hands to all eight sensors on user arms or bullhorns.
- Grasp the sensors firmly.
- Apply constant pressure around the sensors.

Refer to Console Service Manual

This product uses multiple consoles. Refer to the specific Console Service Manual for more detailed information.

List of consoles are found in the Related Products section of the Introduction chapter.

Diagnostics

Diagnostic menus display service information.

Refer to Console Service Manual

This product uses multiple consoles. Refer to the specific Console Service Manual for more detailed information.

List of consoles are found in the Related Products section of the Introduction chapter.

Error code list

Error codes notify user of a problem condition and are displayed on the console. Error codes can also help to indicate the part of the unit most likely to be causing the problem.

Refer to Console Service Manual

This product uses multiple consoles. Refer to the specific Console Service Manual for more detailed information.

List of consoles are found in the Related Products section of the Introduction chapter.

Network Information

Refer to Console Service Manual

This product uses multiple consoles. Refer to the specific Console Service Manual for more detailed information.

List of consoles are found in the Related Products section of the Introduction chapter.

Schematics

Online References

Detailed Schematics are available online in Parts Manuals:

- https://www.lftechsupport.com access technical documentation and part manuals for Life Fitness, Hammer Strength, and ICG.
- http://www.lifefitness.com/parts service parts ordering for Life Fitness, Cybex, SCIFIT, Hammer Strength, and ICG products along with warranty parts ordering and technician requests.
- https://lfworld.lifefitness.com easy to find Knowledge Base articles with answers to frequently asked questions and product support documentation for Life Fitness, Cybex, SCIFIT, Hammer Strength, and ICG.

Advanced Schematic

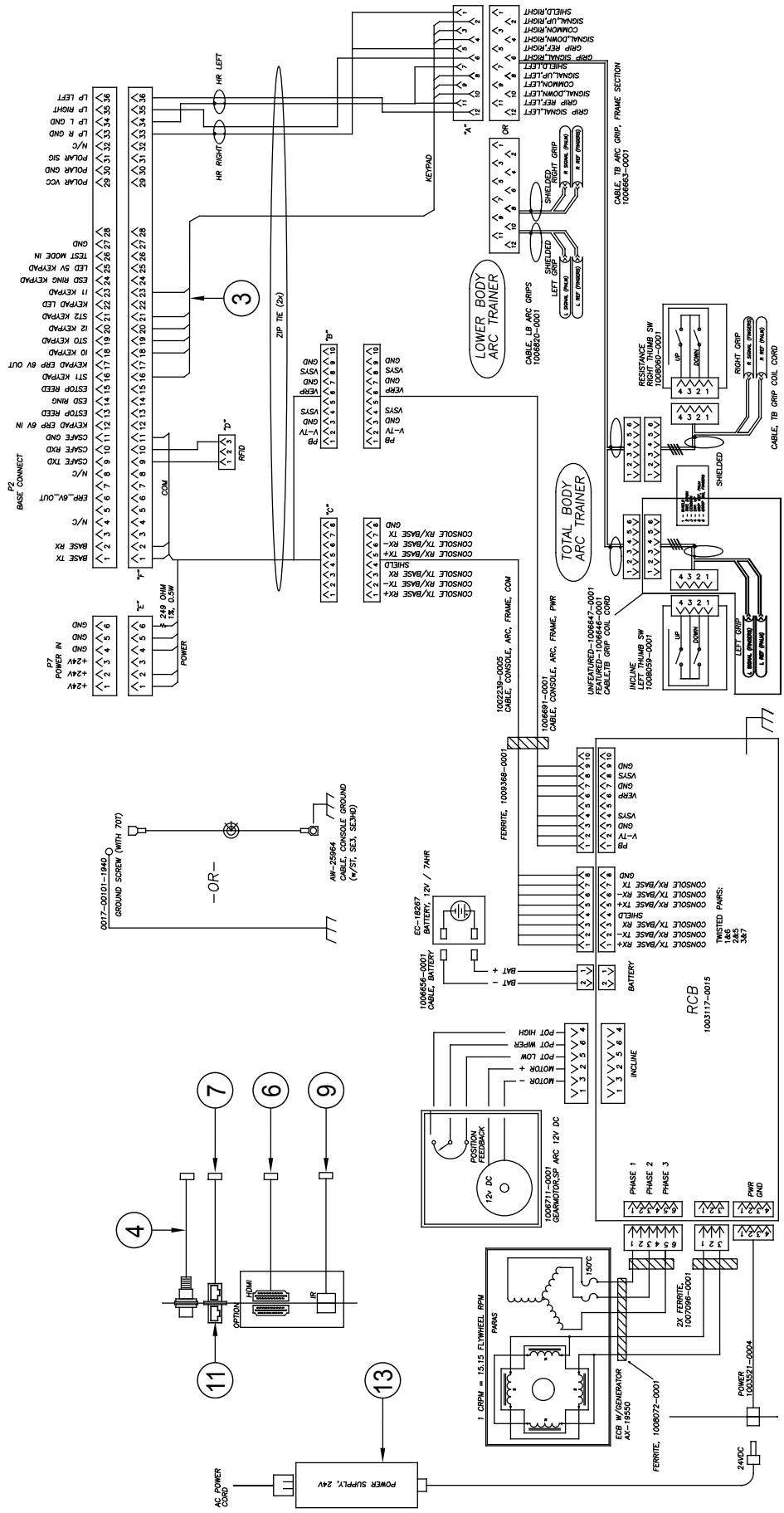

Basic Schematic

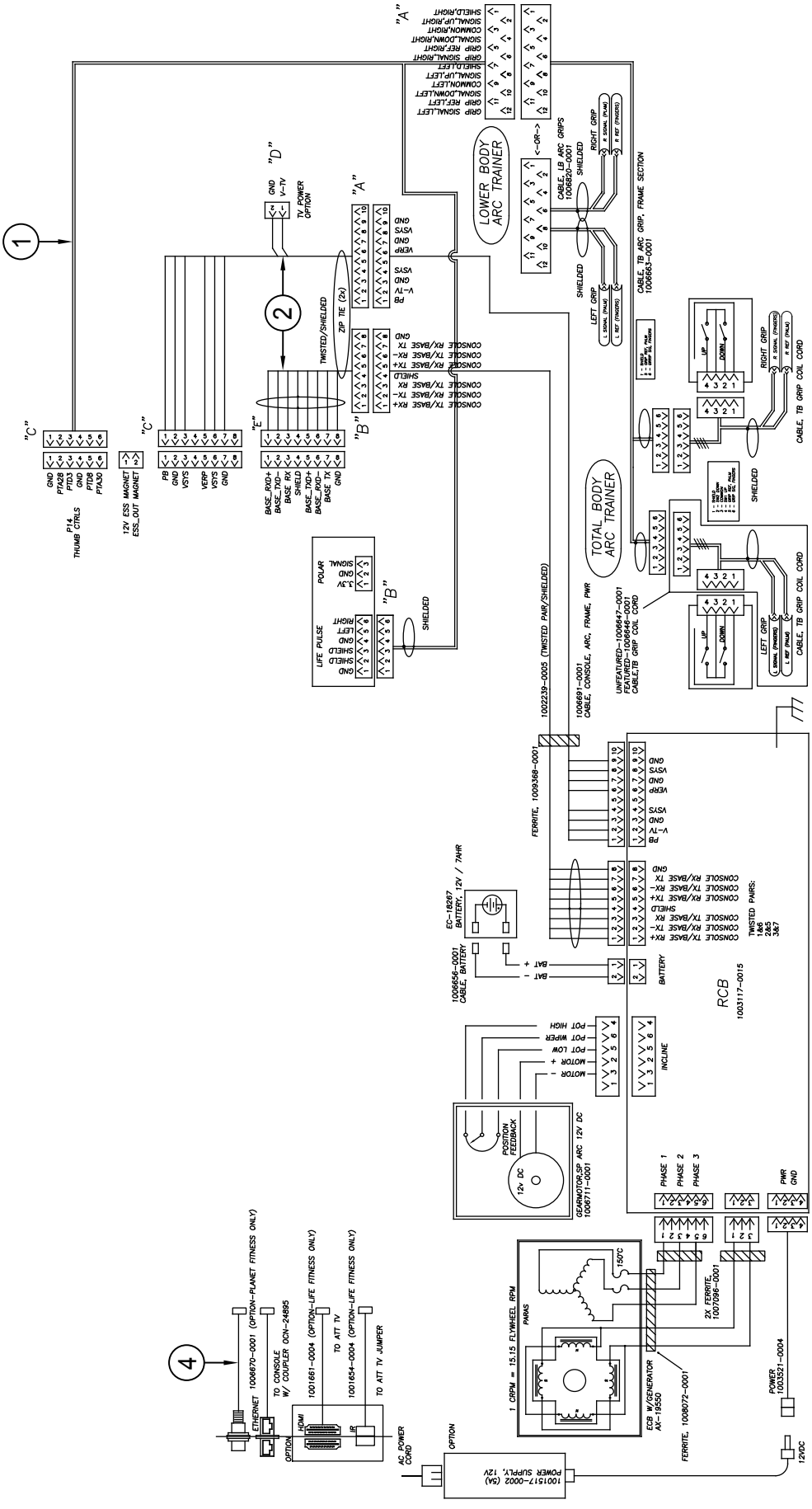

LED Chart

Resistance Control Board LED's

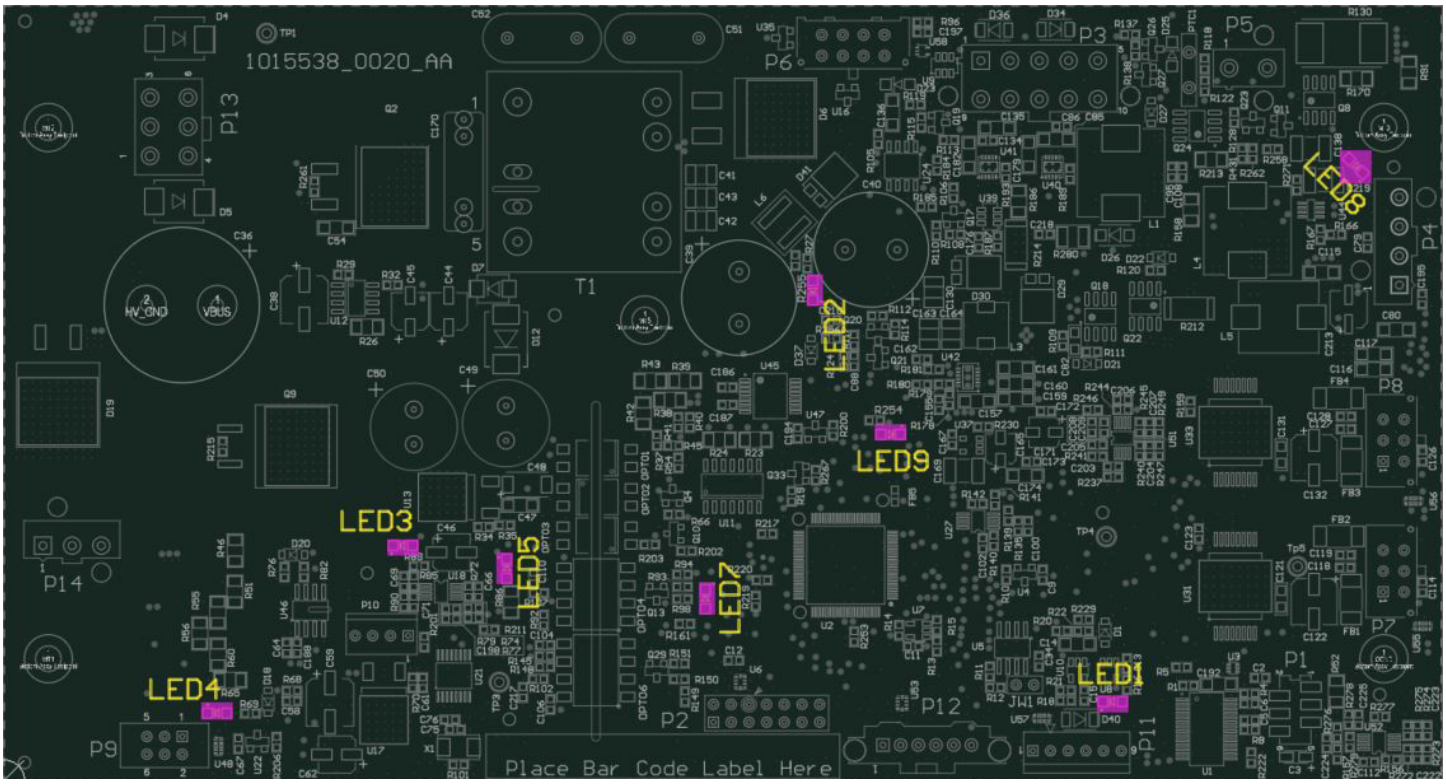

LED	LED Color	LED Function	Normal Mode
1	Green	TTL TXD (base to console)	Blinks in phase with logic LOW TTL TXD signal
2	Red	V_Flybk	Steady ON with gen rpm>300
3	Red	15V	Steady ON with gen rpm>300
4	Red	HS_3.3V	Steady ON with gen rpm>300
5	Red	Brake pwm	Blinks in phase with logic HIGH brk_pwm signal
6		Not used	
7	Yellow	RS485_TXD (base to console)	Blinks in phase with logic LOW RS485_TXD signal
8	Red	V_Boost	Steady On with Hercules and Explore Console
9	Red	3.3V	Steady On

Glossary

Connectors

Electrical plugs used to connect wiring into electrical component.

Heart Rate Sensor / HR Sensor

Located in each handle grip and measures heart rate.

LED

Light Emitting Diode - LED's provide display functionality and are commonly used for indicator lights.

Levelers

Adjustable supports located under the unit, used to stabilize the unit.

Lifepulse™

Life Fitness' proprietary hardware and software system designed to measure user's heart rate by making electrical contact at user's palms.

Polar Receiver

A device directly in front of the operator that monitors heart rate. Designed by the Polar® company.

RCB

Resistance Control Board - Lower control board that adjusts the resistance to a brake or generator.

Warranty

What is Covered

This Life Fitness Family of Brands commercial exercise equipment product is warranted to be free of all defects in material and workmanship.

Who is Covered

The original purchaser or any person receiving the product as a gift from the original purchaser. Warranty will be voided on subsequent transfers.

How Long It is Covered

All coverage is provided by specific Product according to the guidelines listed in Warranty Information.

Who Pays Transportation and Insurance For Service

If the Product or any covered part must be returned to a service facility for repairs, We, Life Fitness Family of Brands, will pay all transportation and insurance charges for the first year. You are responsible for transportation and insurance charge after the first year.

What We Will Do To Correct Covered Defects

We will ship to you any new or rebuilt replacement part or component, or at our option, replace the Product. Such replacement parts are warranted for the remaining portion of the original warranty period.

What is Not Covered

Any failures or damage caused by unauthorized service, misuse, accident, negligence, improper assembly or installation, debris resulting from any construction activities in the Product's environment, rust or corrosion as a result of the Product's location, alterations or modifications without our written authorization or by failure on your part to use, operate and maintain the Product as set out in your Operation Manual ("Manual").

One type RJ45 interchangeable Network ready and Fitness Entertainment port is supplied with the Product. This port complies with the FitLinxx CSAFE specification dated August 4, 2004 stating: 4.75VDC to 10VDC; maximum current of 85mA. Any Product damage caused by a load exceeding this FitLinxx CSAFE specification is not covered by warranty.

All terms of this warranty are void if this product is moved beyond the continental borders of the United States of America (excluding Alaska, Hawaii and Canada) and are then subject to the terms provided by that country's local authorized *Cybex* representative.

What You Must Do

Retain proof of purchase. use, operate and maintain the Product as specified in the Manual; notify the place of purchase of any defect within 10 days after discovery of the defect; if instructed, return any defective part for replacement or, if necessary, the entire Product for repair. *Cybex* reserves the right to decide whether or not a product is to be returned for repair.

How to Get Parts and Service

Refer to the Corporate Headquarters section of this manual for your local service contact information. Reference your name, address and the serial number of your Product (consoles and frames may have different serial numbers). They will tell you how to get a replacement part, or, if necessary, arrange for service where your Product is located.

Exclusive Warranty

THIS LIMITED WARRANTY IS IN LIEU OF ALL OTHER WARRANTIES OF ANY KIND EITHER EXPRESSED OR IMPLIED, INCLUDING BUT NOT LIMITED TO THE IMPLIED WARRANTIES OF MERCHANTABILITY AND FITNESS FOR A PARTICULAR PURPOSE, AND ALL OTHER OBLIGATIONS OR LIABILITIES ON OUR PART. We neither assume nor authorize any person to assume for us any other obligation or liability concerning the sale of this Product. Under no circumstances shall we be liable under this warranty, or otherwise, of any damage to any person or property, including any lost profits or lost savings, for any special, indirect, secondary, incidental or consequential damages of any nature arising out of the use of or inability to use this Product. Some states do not allow the exclusion or limitation of implied warranties or of liability for incidental or consequential damages, so the above limitations or exclusions may not apply to you.

Changes in Warranty Not Authorized

No one is authorized to change, modify or extend the terms of this limited warranty.

Effects of State Laws

This warranty gives you specific legal rights, and you may have other rights which vary from state to state and country by country.

Warranty Information

	3 years	**1 Year**
R Series Arc Trainer (Lower Body and Total Body)	Electrical and Mechanical Parts	Labor

Warranties outside the U.S. may vary.



Columbia Center III - 9525 Bryn Mawr Ave, Rosemont, IL 60018 • 800-351-3737 • 847-288-3700 • FAX 800-216-8893

www.cybexintl.com