SYNRGY

SYN-AC, SYN-AF, SYN-CCC, SYN-CFC, SYN-CFF and SYN-SID

Assembly Instructions

1030073-0001 REV AA

LifeFitness

Corporate Headquarters

Columbia Centre III, 9525 Bryn Mawr Avenue, Rosemont, IL 60018 • U.S.A.
847.288.3300 • FAX: 847.288.3703
Service phone number: 800.351.3737 (toll-free within U.S.A., Canada)
Global Website: www.lifefitness.com

International Offices

AMERICAS

North America

Life Fitness, LLC

Columbia Centre III
9525 Bryn Mawr Avenue
Rosemont, IL 60018 U.S.A.
Telephone: (847) 288 3300
Service Email:
customersupport@lifefitness.com
Sales/Marketing Email:
commercialsales@lifefitness.com

Brazil

Life Fitness Brasil

Av. Rebouças, 2315
Pinheiros
São Paulo, SP 05401-300
BRAZIL
SAC: 0800 773 8282 option 2
Telephone: +55 (11) 3095 5200 option 2
Service Email: suportebr@lifefitness.com
Sales/Marketing Email:
vendasbr@lifefitness.com

Latin America and Caribbean*

Life Fitness, LLC

Columbia Centre III
9525 Bryn Mawr Avenue
Rosemont, IL 60018 U.S.A.
Telephone: (847) 288 3300
Service Email:
customersupport@lifefitness.com
Sales/Marketing Email:
commercialsales@lifefitness.com

EUROPE, MIDDLE EAST, and AFRICA (EMEA)

Belgium, Netherlands, and Luxemburg

Life Fitness (Atlantic) B.V.

Fascinatio Boulevard 230, 4th Fl - Bldg B
3065WB, Rotterdam
The Netherlands
+31 88 646 6666
Service Email:
service.benelux@lifefitness.com
Sales/Marketing Email:
marketing.benelux@lifefitness.com

United Kingdom

Life Fitness UK LTD

Unit 109ª
Lancaster Way Business Park
Ely, Cambs, CB6 3NX
Telephone: General Office (+44) 1353.666017
Customer Support (+44) 1353.665507
Service Email: uk.support@lifefitness.com
Sales/Marketing Email: life@lifefitness.com

Germany, Austria, and Switzerland

Life Fitness Europe GMBH

Neuhofweg 9
85716 Unterschleißheim
GERMANY
Telephone:
+49 (0) 89 / 31775166 Germany
+43 (0) 1 / 6157198 Austria
+41 (0) 848 / 000901 Switzerland
Service Email:
kundendienst@lifefitness.com
Sales/Marketing Email:
vertrieb@lifefitness.com

Spain

Life Fitness IBERIA

C/Frederic Mompou 5,1°1ª
08960 Sant Just Desvern Barcelona
SPAIN
Telephone: (+34) 93.672.4660
Service Email:
servicio.tecnico@lifefitness.com
Sales/Marketing Email:
info.iberia@lifefitness.com

All Other EMEA Countries and Distributor Business EMEA*

Life Fitness (Atlantic) B.V.

Fascinatio Boulevard 230, 4th Fl - Bldg B
3065WB, Rotterdam
The Netherlands
+31 88 646 6666
Service Email:
emeaservicesupport@lifefitness.com

ASIA PACIFIC (AP)

Japan

Life Fitness Japan, Ltd

4-17-33 Minami Aoyama 1F/B1F
Minato-ku - Tokyo 107-0062
Japan
Telephone: (+81) 0120.114.482
Fax: (+81) 03-5770-5059
Service Email: service.lfj@lifefitness.com
Sales/Marketing Email:
sales@lifefitnessjapan.com

Hong Kong

Life Fitness Asia Pacific LTD

26/F, Global Trade Square
21 Wong Chuk Hang Road
Wong Chuk Hang
Hong Kong
Telephone: (+852) 25756262
Fax: (+852) 25756894
Service Email: service.hk@lifefitness.com
Sales/Marketing Email:
marketing.hk.asia@lifefitness.com

All Other Asia Pacific countries and distributor business Asia Pacific*

Life Fitness Asia Pacific LTD

26/F, Global Trade Square
21 Wong Chuk Hang Road
Wong Chuk Hang
Hong Kong
Telephone: (+852) 25756262
Fax: (+852) 25756894
Service Email: service.ap@lifefitness.com
Sales/Marketing Email:
marketing.hk.asia@lifefitness.com

*Also check www.lifefitness.com for local representation or distributor/dealer

User and Service Documents Link

https://lfn.fit/KnowledgeBase

https://lfn.fit/PartStore

Additional information is available online using the links above.

تتوفر معلومات إضافية على الإنترنت باستخدام الرابط أعلاه.

点击上面的链接可在线获取更多信息。

Flere oplysninger er tilgængelige online gennem linket ovenfor.

Bijkomende informatie is online beschikbaar via bovenstaande link.

Vous trouverez plus d'informations en ligne à l'aide du lien ci-dessus.

Zusätzliche Informationen finden Sie online über den oben angegebenen Link.

Ulteriori informazioni sono disponibili online utilizzando il link sopra riportato.

追加情報は上記リンクを使用してオンラインで利用可能です。

상기 링크를 통해 온라인에서 추가 정보를 볼 수 있습니다.

Informações adicionais estão disponíveis on-line, através do link acima.

Дополнительная информация доступна в интернете по ссылке, указанной выше.

Mediante el enlace anterior podrá acceder a información adicional en línea.

Ytterligare information finns online genom att använda länken ovan.

İnternet üzerinden daha fazla bilgi edinmek için yukarıdaki bağlantıyı kullanabilirsiniz.

هناك معلومات إضافية متاحة على الإنترنت باستخدام الرابط أعلاه.

Informazio osagarria eskuragarri dago goiko estekaren bidez.

Допълнителна информация можете да намерите онлайн, като използвате връзката по-горе.

Mitjançant l'enllaç anterior podreu accedir a informació addicional en línia.

使用上面的連結線上提供額外資訊。

Dodatne informacije možete pronaći na internetu sljedeći vezu iznad.

ከላይ የተቀመጠውን አገናኝ(ሊንክ) በመጠቀም መረጃዎች አንላይን ያገኛሉ፡፡

Lisätietoja on saatavissa verkosta käyttämällä yllä olevaa linkkiä.

Wubetumi anya nsɛm afoforo aka ho wɔ wɛbsait so denam asɛm a ɛwɔ atifi hɔ a wubemia so so.

Πρόσθετες πληροφορίες είναι διαθέσιμες ονλάιν χρησιμοποιώντας το σύνδεσμο παραπάνω.

מידע נוסף אפשר לקבל באינטרנט באמצעות הקישור לעיל.

További információ elérhető online, a fenti hivatkozás segítségével.

Viðbótarupplýsingar eru fáanlegar á netinu með því að smella á tengilinn hér fyrir ofan.

Plus indicium per superum situm potes invenire.

മുകളിലുള്ള ലിങ്ക് ഉപയോഗിച്ച് ഓൺലൈനിൽ കൂടുതല് വിവരങ്ങൾ ലഭ്യമാണ്.

Ytterligere informasjon er tilgjengelig på nettet via linken ovenfor.

Dodatkowe informacje są dostępne online pod powyższym odnośnikiem.

Informações adicionais estão disponíveis online a usar o link acima.

Informații suplimentare sunt disponibile online, utilizând link-ul de mai sus.

Dodatne informacije dostupne su na mreži putem gornjeg linka.

Ďalšie informácie sú dostupné online na vyššie uvedenom odkaze.

Table of Contents

Safety
Safety Information.... 8
Warnings and Cautions.... 9
Product Labels.... 10
Label Locations.... 11

Assembly Procedure
Assembly Links.... 12
Tools Required.... 12
Left-Right Orientation.... 12
Stability Options.... 13
Unpacking and Disposal of Packaging.... 14
Pallet Unpacking.... 14
Arrange Side Frames.... 15

Assembly: Monkey Bars
Monkey Bar Components.... 17
Monkey Bar Hardware Kits.... 17
Install Monkey Bar Option.... 19
Install Monkey Bar Flip Step Option.... 21

Assembly: Side Frames
Side Frame, Cable Components.... 24
Side Frame, Cable Hardware Kit.... 24
Install Side Frame: Cable.... 25
Side Frame, Functional Components.... 29
Side Frame, Functional Hardware Kit.... 29

Assembly: Extension Legs
Extension Leg Components.... 30
Extension Leg Hardware Kit.... 30
Install Extension Leg.... 30

Assembly: Freestanding System
Freestanding System Components.... 32
Ballast Box Hardware Kit.... 32
Ballast to Side Frame Hardware Kit.... 32
Ballast Spacers Hardware Kit.... 33
Install Freestanding System.... 33

Assembly: Chin
Chin Components.... 38
Chin Hardware Kit.... 38
Install Chin Option.... 38

Assembly: Stability Ball Storage
Stability Ball Storage Components.... 40
Stability Ball Storage Hardware Kit.... 40
Install Stability Ball Storage.... 40

Life Fitness® is a registered trademark.

Gym Wipes® is a registered trademark of the 2XL Corporation. PureGreen 24 is a trademark of Pure Green.

© Copyright 2026, Life Fitness, LLC. All Rights Reserved. Life Fitness, Hammer Strength, Cybex, ICG and SCIFIT are registered trademarks of Life Fitness, LLC and its affiliated companies and subsidiaries. Disclaimer: Images and specifications are current as of the date of publication and are subject to change.

Columbia Center III - 9525 Bryn Mawr Ave., Rosemont, IL 60018 • 847-288-3300 •
www.lifefitness.com • 1030073-0001 AA • 2026

Assembly: Shelf

Shelf Components....41
Shelf Installation Information....41
Shelf Hardware Kit....42
Shelf Hardware Kit: Accessory/Dumbbell....43
Shelf Hardware Kit: Weight Horn....43
Install Shelf Option....43
Install Weight Plate Shelf Option....44

Assembly: Frame Top

Frame Top Components....48
Barbell Components....48
Barbell Training Hardware Kits....49
Rope Pull Hardware Kit....50
Wall Ball Hardware Kit....50
Install Frame Top Option....51
Install Barbell Training Option....52

Assembly: Frame Bottom

Frame Bottom Components....55
Battle Rope Hardware Kit....55
Install Frame Bottom Option....56
Power Pivot Hardware Kit....56
Power Pivot Divider Hardware Kit....57
Install Power Pivot Option....58

Assembly: Side Storage

Side Storage Installation Information....62
80mm Hardware Kit....64
Side Dumbbell Hardware Kit....64
Side Foam Storage Hardware Kit....64
Install Side Storage Option....65

Assembly: Final

Final Assembly....67

Product Information

Specifications....69
Footprint and Live Area....71

Maintenance Procedures

Maintenance Schedule....73

Warranty

What is Covered....74
Who is Covered....74
Who Pays Transportation and Insurance For Service....74
What We Will Do To Correct Covered Defects....74
What is Not Covered....74
Owner's Manual....74
Exclusive Warranty....74
Changes in Warranty Not Authorized....74
Effects of State Laws....74
Terms of Warranty Coverage....74

Life Fitness® is a registered trademark.

Gym Wipes® is a registered trademark of the 2XL Corporation. PureGreen 24 is a trademark of Pure Green.

© Copyright 2026, Life Fitness, LLC. All Rights Reserved. Life Fitness, Hammer Strength, Cybex, ICG and SCIFIT are registered trademarks of Life Fitness, LLC and its affiliated companies and subsidiaries. Disclaimer: Images and specifications are current as of the date of publication and are subject to change.

Columbia Center III - 9525 Bryn Mawr Ave., Rosemont, IL 60018 • 847-288-3300 •
www.lifefitness.com • 1030073-0001 AA • 2026

Cable Handling Guide

Cable Terminations, Tensioning and Wear Guide.... 76
Cable Terminations.... 76
Tensioning Cable.... 77
Strength Cable Wear Guide.... 78
Insert Inspection.... 79

Bolt to Floor Guide

Introduction.... 80
Delivery and Installation Tips.... 81
Anchor Type - Dynamic.... 82
Anchor Specifications.... 82
Pullout Force.... 82
Tools Required.... 83
Anchor Procedure.... 84
Foot Dimensions.... 86

Life Fitness® is a registered trademark.

Gym Wipes® is a registered trademark of the 2XL Corporation. PureGreen 24 is a trademark of Pure Green.

© Copyright 2026, Life Fitness, LLC. All Rights Reserved. Life Fitness, Hammer Strength, Cybex, ICG and SCIFIT are registered trademarks of Life Fitness, LLC and its affiliated companies and subsidiaries. Disclaimer: Images and specifications are current as of the date of publication and are subject to change.
Columbia Center III - 9525 Bryn Mawr Ave., Rosemont, IL 60018 • 847-288-3300 •
www.lifefitness.com • 1030073-0001 AA • 2026

1. Safety

Safety Information

Operating Warnings

⚠ **WARNING:** This product can expose you to chemicals including 1,3 Butadiene, which is known to the State of California to cause cancer and birth defects or other reproductive harm. For more information go to http://www.P65Warnings.ca.gov

- Life Fitness does not warrant nor guarantee that component parts used in the manufacture of products offered under the Life Fitness brand are latex-free. Users of these products must take all necessary precautions to prevent accidental contact that could lead to an adverse latex reaction.
- It is the purchaser's sole responsibility to properly instruct its end users and supervising personnel as to the proper operating procedures of all equipment.
- This equipment is not intended for use by children. Keep children under the age of 14 away from the machine.
- Do not allow users to wear loose fitting clothing or jewelry while using equipment. It is also recommended to have users secure long hair back and up to avoid contact with moving parts.
- All bystanders must stay clear of all users, moving parts and attached accessories and components while machine is in operation.
- This equipment is categorized as class S per EN ISO 20957-1. As such this equipment is only intended for commercial, institutional and/or studio facilities. It is not intended for home use. Contact Life Fitness with any questions regarding this classification.

Access Control

- Life Fitness recommends that all commercial fitness equipment be used in a supervised area. It is recommended that the equipment be located in an access controlled area. Control is the responsibility of the facility owner.

Installation

- Life Fitness requires that all equipment be secured to a solid, level surface to stabilize it and eliminate rocking or tipping over. This must be performed by a licensed contractor. See Bolt to Floor Guide for installation procedure.

Proper Usage

- Do not use any equipment in any way other than as designed or intended by the manufacturer. It is imperative that Life Fitness equipment is used properly to avoid injury.
- Injuries may result if exercising improperly or excessively. It is recommended that all individuals consult a physician prior to commencing an exercise program. If at any time during exercise you feel faint, dizzy or experience pain, STOP EXERCISING and consult your physician.
- Keep body parts (hands, feet, hair, etc.), clothing and jewelry away from moving parts to avoid injury.

Inspection

- DO NOT attempt to use or repair any accessory approved for use with the equipment which appears to be damaged or worn.
- DO NOT use or permit use of any equipment that is damaged and/or has worn or broken parts. For all Life Fitness equipment, use only replacement parts supplied by Life Fitness.
- Maintain labels, name plates and instructional placards. Do not remove labels or instructional placards for any reason. They contain important information. Contact Customer Support to replace any worn, damaged, or unreadable labels or instructional placards and to ensure that you are always using the latest version of labels and instructional placards.
- Equipment Maintenance - Preventative maintenance is the key to smooth operating equipment as well as to keep your liability to a minimum. Equipment needs to be inspected at regular intervals.
- Ensure that any person(s) making adjustments or performing maintenance or repair of any kind is qualified to do so. Life Fitness will provide service and maintenance training at our corporate facility upon request or in the field if proper arrangements are made.
- Before use, examine all accessories approved for use with the Life Fitness equipment for damage or wear.

Plate Loaded, Free Weight, and Body Weight Systems

- If the unit is equipped with weight rods, use only Olympic style weight plates (2.0" bore) for training weight. Do not use dumbbells or any means other than those stated to increase weight resistance - See machine specific section for more information.
- Always utilize weight plate retention devices such as straps, clamps or pins.

- Only add weight plates up to the load limits of the unit. Make sure all weight plates are completely placed on the weight rod.
- Never exceed the load rating for any plate loaded station, body weight station, bench or other free weight device; including specific weight rod and band peg limits. See machine specifications for load limit information.
- Contact a Life Fitness representative with any questions regarding proper weights and loading.

Warnings and Cautions

Warning labels indicate a potentially hazardous situation that could result in serious injury or death if the precautions are not observed.

Caution labels indicate a potentially hazardous situation that could result in serious injury or damage to machine if the precautions are not observed.

Contact Customer Support Services to replace any worn or damaged labels.

Product Labels

Installers to verify that all labels are accounted for. Replace any labels that are missing or damaged.

General Warning Label-Cable

WARNING

SERIOUS INJURY CAN OCCUR ON THIS EQUIPMENT. YOU MUST FOLLOW THESE PRECAUTIONS TO AVOID INJURY!

1. Before using, read all the warnings and obtain instruction on the use of this machine. Use only for intended exercise. **DO NOT** modify the machine.
2. Obtain a medical exam before beginning any exercise program.
3. Keep body, hair and clothing free of all moving objects.
4. Inspect the machines before use. **DO NOT** use if it appears damaged. **DO NOT** attempt to fix a broken or jammed machine. Notify staff immediately.
5. Be certain that weight pin is completely inserted. Use only the pin provided by the manufacturer. If unsure, seek assistance.
6. Never pin the weights or prop plate into an elevated position. **DO NOT** use the machine if found in this condition. **DO NOT** attempt to fix. Seek assistance.
7. Inspect cables and their connections before using machine. **DO NOT** attempt to fix. Seek assistance.
8. Use only the incremental weights supplied by the manufacturer. **DO NOT** use dumbbells or other means to add resistance to the machine.
9. Children must not be allowed near this machine. Supervise teenagers.
10. Manufacturer recommends that all equipment be secured to the floor to stabilize and eliminate rocking or tipping over. Use a licensed contractor.
11. **DO NOT REMOVE THIS LABEL. REPLACE IF DAMAGED.**

General Warning Label-Functional

WARNING

SERIOUS INJURY CAN OCCUR ON THIS EQUIPMENT. YOU MUST FOLLOW THESE PRECAUTIONS TO AVOID INJURY!

1. Before using, read all the warnings and obtain instruction on the use of this machine. Use only for intended exercise. **DO NOT** modify the machine.
2. Obtain a medical exam before beginning any exercise program.
3. Keep body, hair and clothing free of all moving objects.
4. Inspect machine and attachments before use. **DO NOT** use if the machine or attachments appear damaged. **DO NOT** attempt to fix broken or jammed machine or damaged attachments. Notify staff immediately.
5. Children must not be allowed near this machine. Supervise teenagers.
6. **DO NOT REMOVE THIS LABEL. REPLACE IF DAMAGED.**

Adjustable Carriage Warning

FCC Compliant Cable

Patent:
www.lifefitness.com/patents

EN ISO 20957
TSCA Title VI Compliant

THIS DEVICE COMPLIES WITH PART 15 OF THE FCC RULES. OPERATION IS SUBJECT TO THE FOLLOWING TWO CONDITIONS: (1) THIS DEVICE MAY NOT CAUSE HARMFUL INTERFERENCE, AND (2) THIS DEVICE MUST ACCEPT ANY INTERFERENCE RECEIVED, INCLUDING INTERFERENCE THAT MAY CAUSE UNDESIRED OPERATION.

Pull Pin Engagement

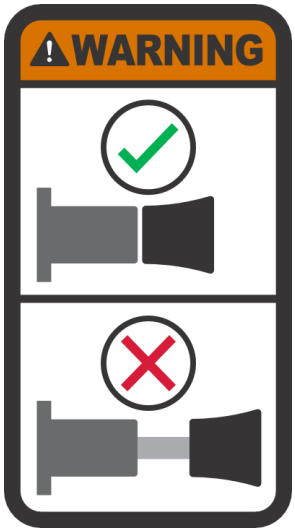

Serial Number Label

LifeFitness

CAGE: 0CMY5
Class: S

9525 Bryn Mawr Ave
Rosemont, IL 60018
USA 1-847-288-3300
www.lifefitness.com

Bijdorplaan 25-31
2992 LB Bareendrecht
The Netherlands
+31 0 180 646 666

Model:
XXX

Max User Wt:	XXXlbs	XXXkgs
Max Training Wt:	XXXlbs	XXXkgs
Max Storage Wt:	XXXlbs	XXXkgs

SN: XXXXXXXXXXXX

Manufactured in the USA with US and Foreign parts

Weight at Handle

Weight stack label indicates resistance for each handle

Label Locations

NOTE: Verify labels are in correct location during installation process.

Freestanding System:

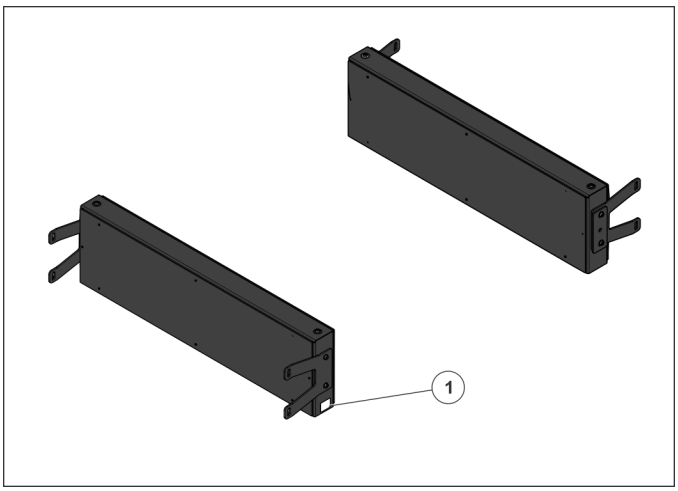

Item	Description
1	Serial Number

Cable Side Frame:

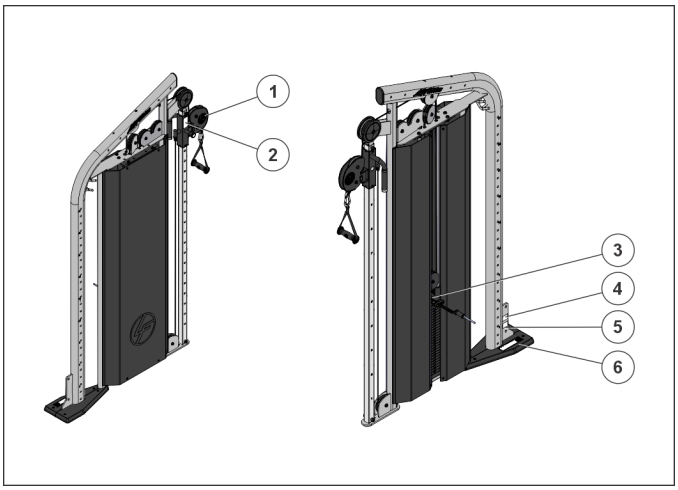

Item	Description
1	Adjustable Carriage Warning
2	Pull Pin Engagement
3	Weight at Handle
4	FCC Compliant
5	Serial Number
6	General Warning-Cable

Functional Side Frame:

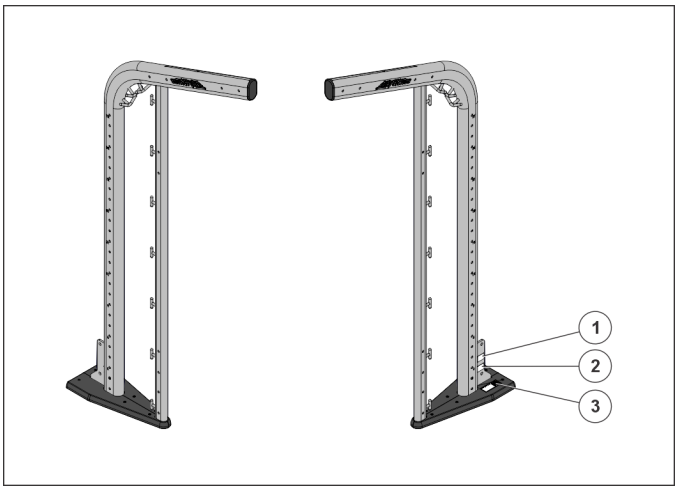

Item	Description
1	FCC Compliant
2	Serial Number
3	General Warning-Functional

2. Assembly Procedure

Assembly Links

Click for a direct link to the assembly topic:

- Monkey Bar Installation
- Side Frame Installation
- Extension Leg Installation
- Freestanding System Installation
- Chin Installation
- Stability Ball Storage Installation
- Shelf Installation
- Frame Top Installation
- Frame Bottom Installation
- Side Storage Installation
- Final Installation

Tools Required

- #2 Phillips screwdriver
- 3 mm Allen wrench
- 4 mm Allen wrench
- 7 mm Allen wrench (x2)
- 17 mm wrench
- 24 mm wrench
- Rubber mallet
- Safety glasses
- Tape measure
- Torque wrench

Left-Right Orientation

Determining left and right for assembly instruction's terminology.

Left and right is shared with the user, when user is facing the unit.

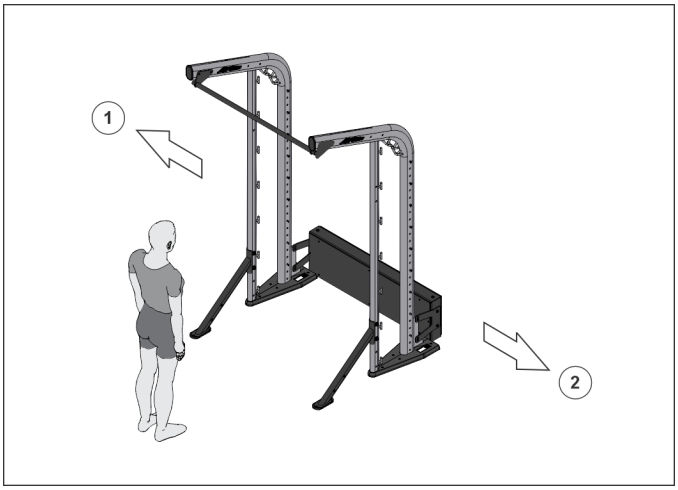

Item	Description
1	Left Side
2	Right Side

Stability Options

Many options are available. Bolt-To-Floor is the option that Life Fitness recommends, as it provides the lowest cost and best rigidity for SYNRGY. However, all models have a Non-Bolt-To-Floor options.

NOTE: These options must be selected for every CORE & ADD model. Some require additional models to be ordered.

	Functional Models (SYN-CFF, SYN-CFC, SYN-AF)	Cable Models (SYN-CCC, SYN-AC)
BOLT-TO-FLOOR OPTIONS		
All SYNRGY	Bolt-to-Floor Preferred. Requires concrete sub-floor.	Bolt-to-Floor Preferred. Requires concrete sub-floor.
NON BOLT-TO-FLOOR OPTIONS		
Stand Alone/Wall Configurations	Freestanding System Provides: • Frame Extension • Heavy Ballast (SYN-FS)	None Cable-only units naturally provide the Frame Extension and Ballast to stabilize the product. **NOTE:** If performing body weight suspension training (with TRX® or similar device) on the Cable Model, it is required to be bolt-to-the-floor or have a Freestanding System.
NON BOLT-TO-FLOOR OPTIONS		
Center Room Configurations	Back-to-Back 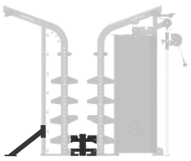 Provides: • Frame Connectors • Frame Extension • Light Ballast (SYN-BB)	Back-to-Back 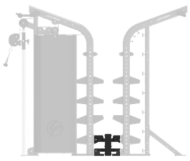 Provides: • Frame Connectors
	Monkey Bars Provides: • Monkey Bar Connectors (SYN-MB)	Monkey Bars Provides: • Monkey Bar Connectors (SYN-MB)

Unpacking and Disposal of Packaging

Carefully unpack the fitness equipment as described in the assembly manual and inspect all components for damage. Make sure to remove all packaging materials before assembling and using the product. Keep small parts and plastic materials out of reach of children to prevent suffocation and injury hazards.

All packaging materials used for this product are designed to be recyclable or reusable. Please dispose of packaging materials responsibly and in accordance with local, regional, and national regulations. Separate materials such as cardboard, paper, plastics, and protective foams and place them in the appropriate recycling or waste collection streams.

Do not dispose of packaging materials with household waste unless permitted by local regulations. In regions where applicable, follow specific environmental directives (such as recycling, extended producer responsibility, or waste electrical and electronic equipment requirements) to minimize environmental impact.

By properly recycling or disposing of packaging materials, you help conserve resources and support environmental sustainability. See the following Cardio and Strength Product Install Packaging Removal and Disposal Knowledge Base article for additional information.

Pallet Unpacking

1. ⚠ **WARNING:**
   Two or More People Required:
   SYNRGY shipments are mounted to shipping pallets and will require at least two people to unload.

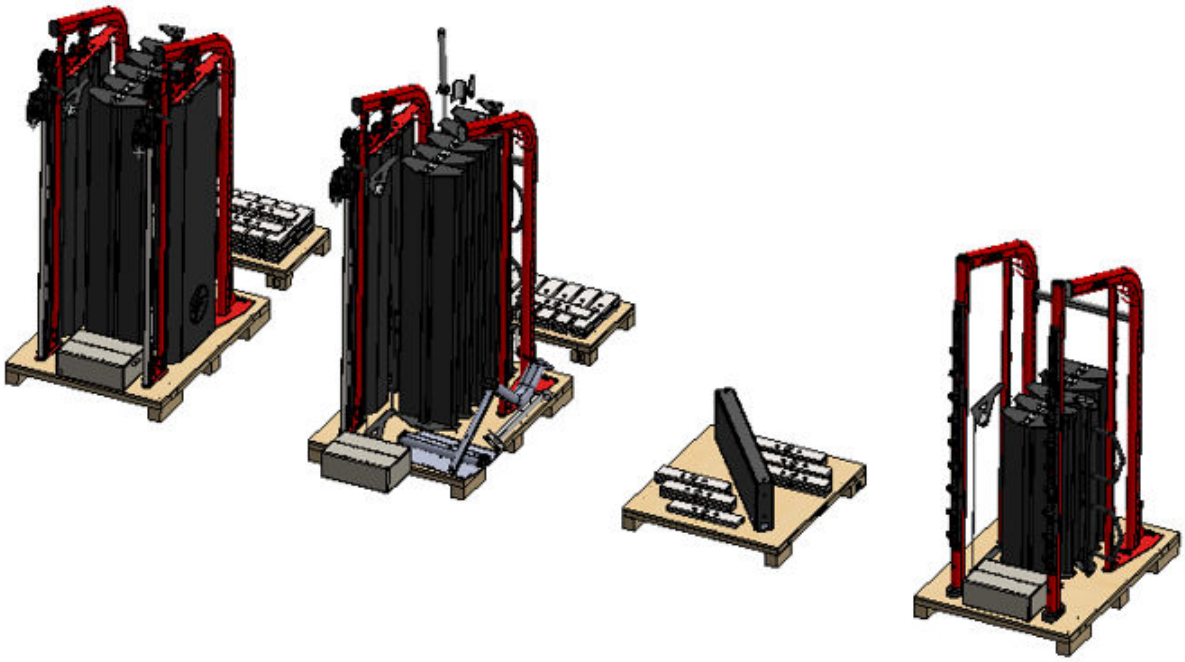

2. ⚠ **WARNING:**
Two or More People Required:
Remove hardware from the shipping pallet and shipping brace. Then carefully remove items from shipping pallets.

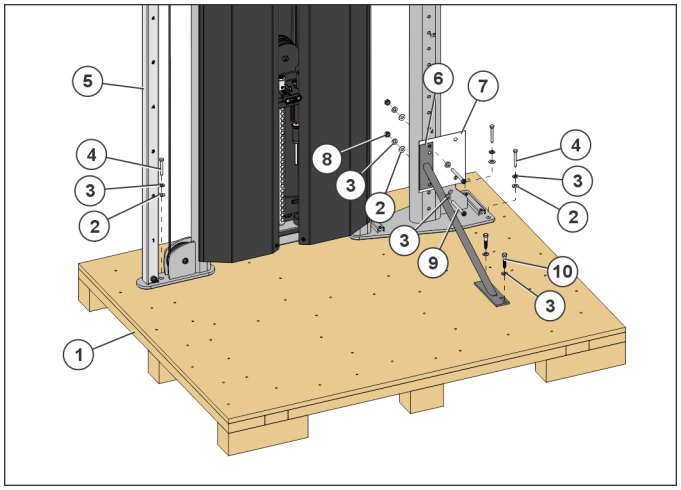

Item	Description	Qty.
1	Shipping Pallet	1
2	Nylon Washer	5
3	Washer: 3/8 X 0.81 X 0.06, FL, SS	7
4	5/16 X 2.5 Lag Bolt	3
5	Cable Side Frame	1
6	Shipping Brace Weldment	1
7	Protective Vinyl Pad	1
8	M10 Nut	2
9	M10 X 90mm Bolt	2
10	3/8 X 2 Lag Bolt	2

NOTE: Shipping anchors highlight bolt to floor location points.

Arrange Side Frames

Arrange and Install Synrgy Side Frames:

1. For Inline Side Frames:
Measuring from the side frame's baseplates, set the side frames apart, in either 46 or 66 inches (116.8 or 167.6 cm) sections based on shelf width.

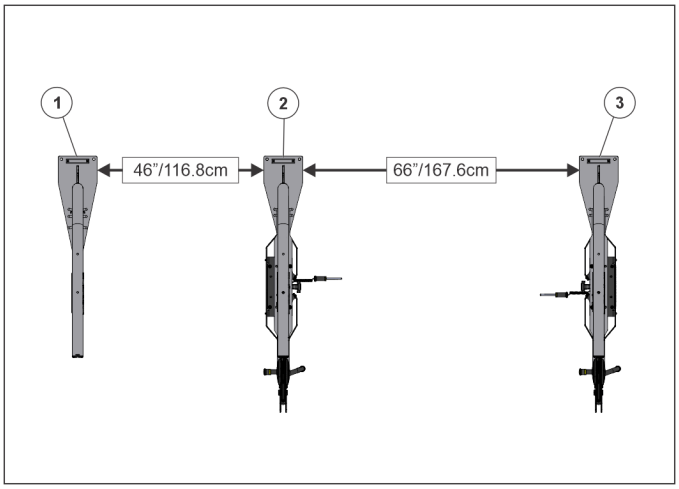

Item	Description	Qty.
1	Functional Side Frame	1
2	Cable Side Frame (right facing)	1
3	Cable Side Frame (left facing)	1

2. For Monkey Bars - 4 Foot

Measuring from the side frame's baseplates, set the side frames apart on center 46 inches/116.8cm side to side, and 52 inches/132cm back-to-back.

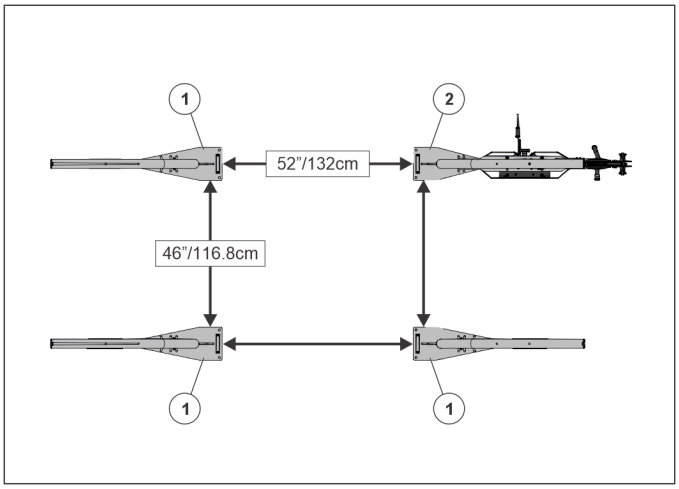

Item	Description	Qty.
1	Functional Side Frame	3
2	Cable Side Frame (right facing)	1

3. For Monkey Bars - 6 Foot

Measuring from the side frame's baseplates, set the side frames apart on center in 66 inches/167.6cm side to side, and 52 inches/132cm back-to-back.

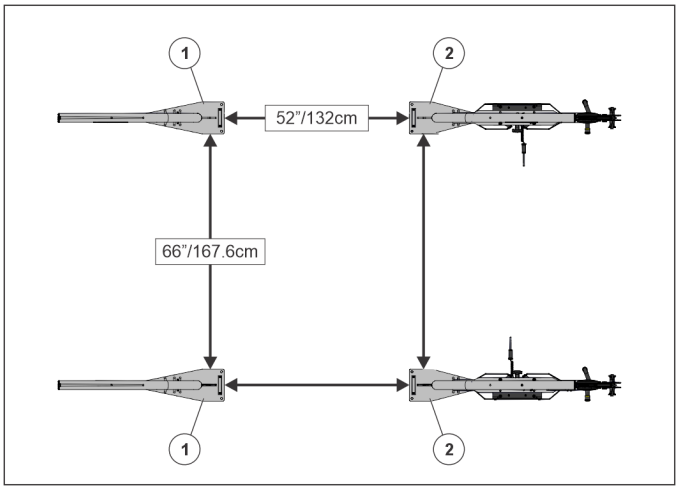

Item	Description	Qty.
1	Functional Side Frame	3
2	Cable Side Frame (right facing)	1

3. Assembly: Monkey Bars

Monkey Bar Components

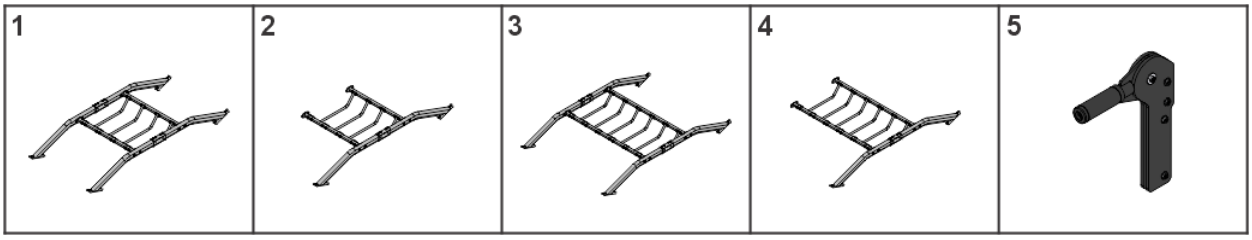

Item	Description	Width	Qty.
1	Four Foot Core Assembly	4ft/1.2m	1
2	Four Foot Add Assembly		1
3	Six Foot Core Assembly	6ft/1.8m	1
4	Six Foot Add Assembly		1
5	Flip Step Assembly	-	1

Monkey Bar Hardware Kits

MB, Bars, 4FT

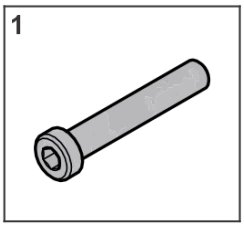

Item	Description	Qty.
1	M10 X 60mm Bolt	16

MB, Bars, 6FT

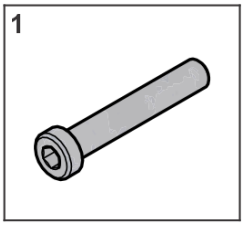

Item	Description	Qty.
1	M10 X 60mm Bolt	24

SYNRGY, MB, SIDE FRAME

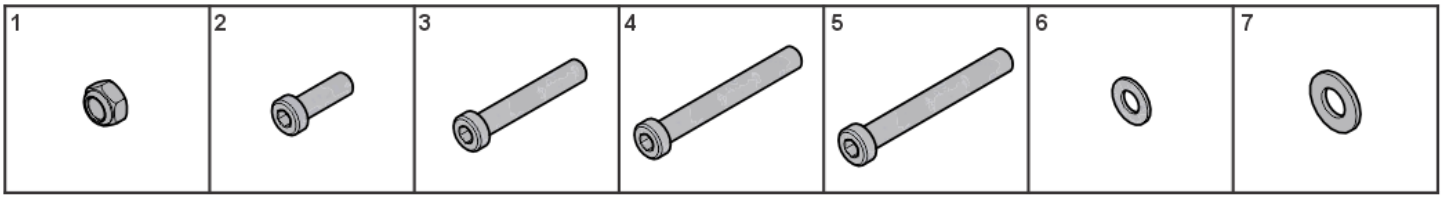

Item	Description	Qty.
1	M10 Nut Hex Nylock	4
2	M10 X 25mm Bolt	2
3	M10 X 80mm Bolt	4
4	M10 X 130mm Bolt	4
5	M10 X 140mm Bolt	4
6	Washer: 3/8 X 0.81 X 0.06, FL, SS	4
7	Washer: 3/8 X 1.25 X 0.10, FL, SS	4

BLISTER PACK SYNRGY, MB, BARS, 4FT

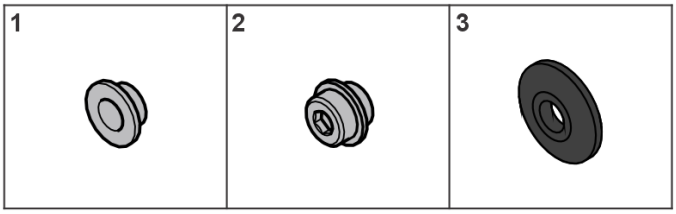

Item	Description	Qty.
1	Pulley Retainer	16
2	Socket Nut	16
3	Backing Washer	16

BLISTER PACK SYNRGY, MB, BARS, 6FT

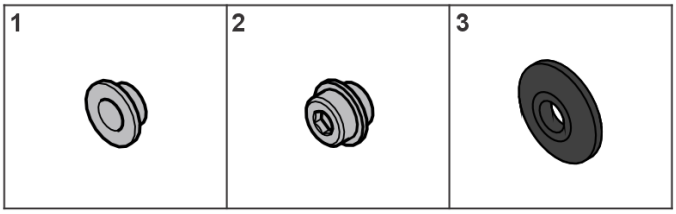

Item	Description	Qty.
1	Pulley Retainer	24
2	Socket Nut	24
3	Backing Washer	24

BLISTER PACK, SYNRGY, MB, SIDE FRAME

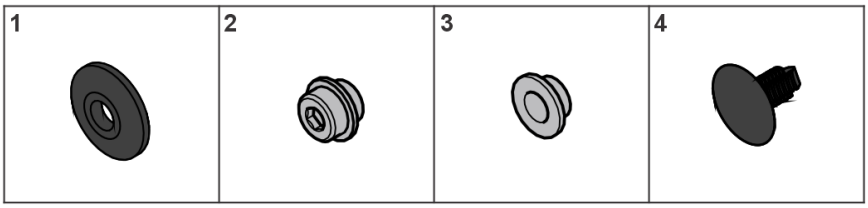

Item	Description	Qty.
1	Backing Washer	4
2	Socket Nut	8
3	Pulley Retainer	8

Item	Description	Qty.
4	Panel Retainer	4

Install Monkey Bar Option

Install Monkey Bar Option (if equipped):

1. Assemble an arch from the two monkey bar frame weldments, connector brackets and hardware. Tighten hardware to **20-29 ft-lbs/27.1-39.3 Nm**.

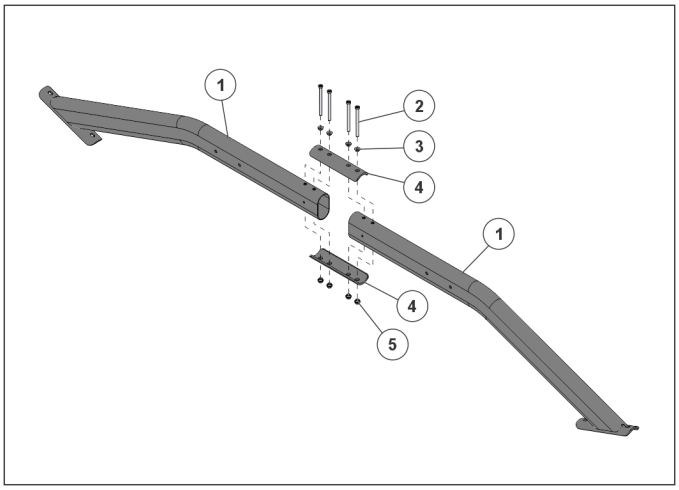

Item	Description	Qty.
1	Monkey Bar Frame Weldment	2
2	M10 X 130mm Bolt	4
3	Pulley Retainer	4
4	Connector Bracket	2
5	Socket Nut	4

2. Fasten finishing plates to arch assembly by gently tapping panel retainers into place.

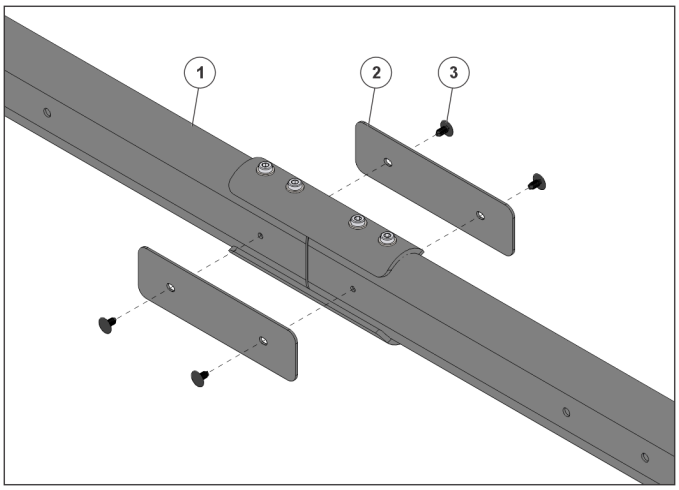

Item	Description	Qty.
1	Arch Assembly	1
2	Finishing Plate	2
3	Panel Retainer	4

3. Fasten arch assembly onto side frames with its hardware and tighten to **20-29 ft-lbs/27.1-39.3 Nm**.

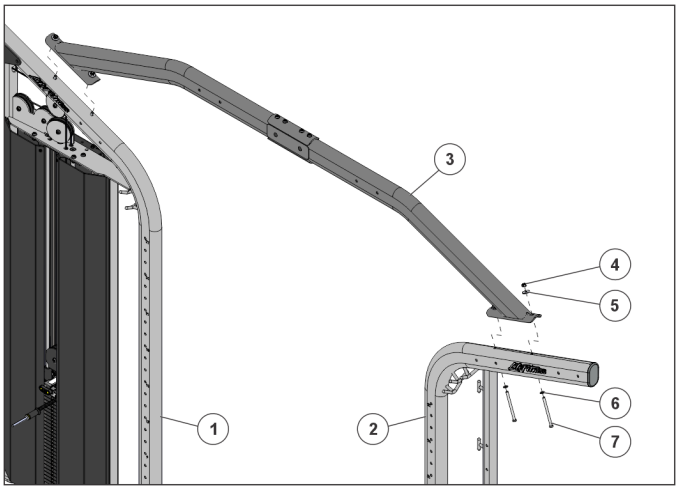

Item	Description	Qty.
1	Cable Side Frame	1
2	Functional Side Frame	1
3	Arch Assembly	1
4	M10 Nut Hex Nylock	4
5	Washer: 3/8 X 1.25 X 0.10, FL, SS	4
6	Washer: 3/8 X 0.81 X 0.06, FL, SS	4
7	M10 X 130mm Bolt	4

4. Repeat previous steps and attach the second arch assembly, tightening hardware to **20-29 ft-lbs/27.1-39.3 Nm**.

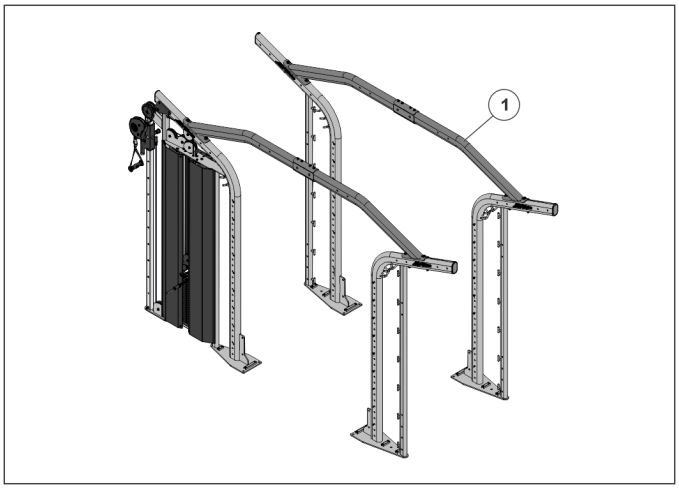

Item	Description	Qty.
1	Arch Assembly	1

5. Attach the monkey rail weldment to the arch assembly and tighten to **20-29 ft-lbs/27.1-39.3 Nm**.

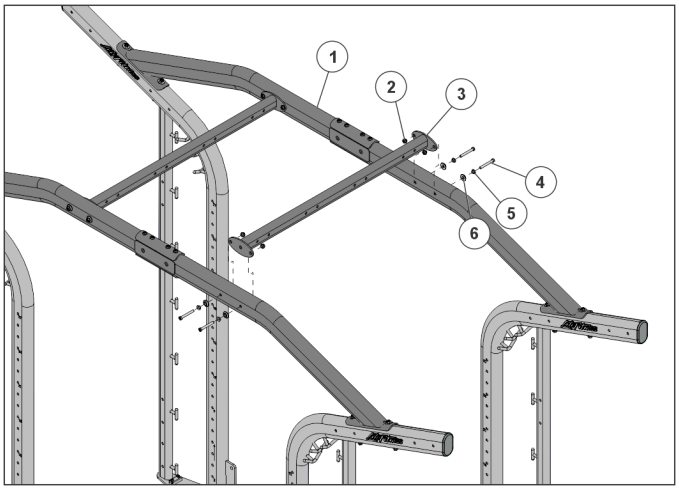

Item	Description	Qty.
1	Arch Assembly	1
2	Socket Nut	4
3	Monkey Rail Weldment	1
4	M10 X 80mm Bolt	4
5	Pulley Retainer	4
6	Backing Washer	4

6. Attach the monkey bars to the monkey rails with hardware and tighten to **20-29 ft-lbs/27.1-39.3 Nm**.

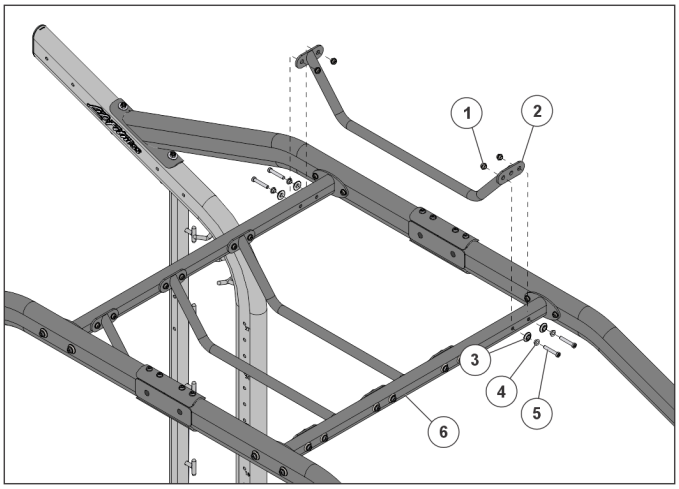

Item	Description	Qty.
1	Socket Nut	2
2	Monkey Bar	1
3	Backing Washer	2
4	Pulley Retainer	2
5	M10 X 60mm Bolt	2
6	Monkey Rail	2

Install Monkey Bar Flip Step Option

Install Monkey Bar Flip Step Option (if equipped):

1. Remove the hand-tightened hardware from the flip step's bottom two holes.

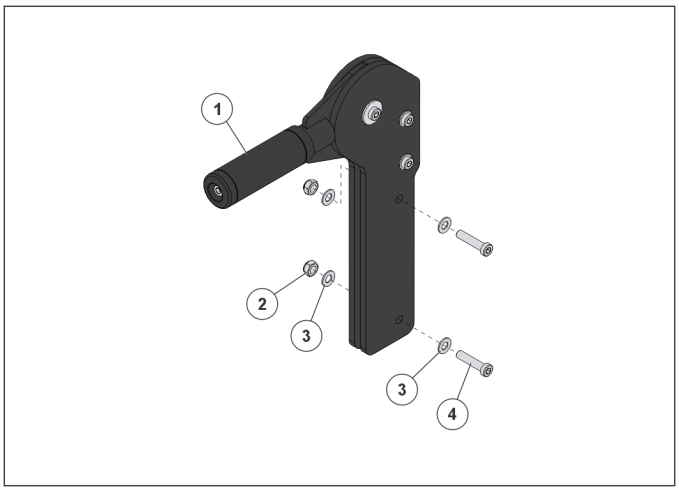

Item	Description	Qty.
1	Flip Step Assembly	1
2	M10 Hex Nut	2
3	Washer: 3/8 X 0.81 X 0.06, FL, SS	4
4	M10 X 45mm Bolt	2

2. Hex nuts face towards shelves, if equipped. If needed, flip hardware around and tighten to **20-29 ft-lbs/27.1-39.3 Nm** .

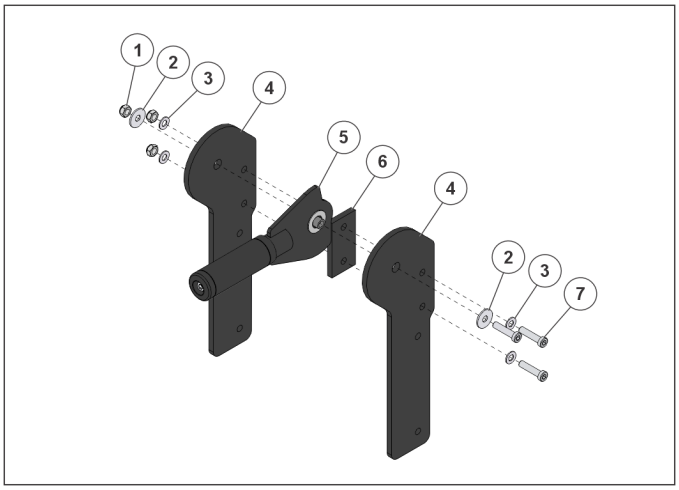

Item	Description	Qty.
1	M10 Nut Hex Nylock	3
2	3/8 x 1.25 OD Washer	2
3	Washer: 3/8 X 0.81 X 0.06, FL, SS	6
4	Flip Step Plate	2
5	Flip Step Handle Assembly	1
6	3/8 x 2 x 4 Plate	1
7	M10 X 45mm Bolt	3

3. With the hex nuts facing the shelf, install flip step assembly onto the side frame with its hardware and tighten to **20-29 ft-lbs/27.1-39.3 Nm**.

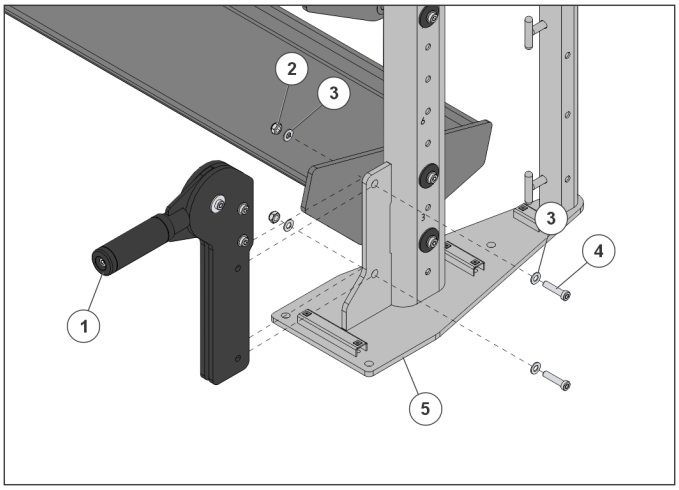

Item	Description	Qty.
1	Flip Step Assembly	1
2	M10 Nut Hex Nylock	2
3	Washer: 3/8 X 0.81 X 0.06, FL, SS	4
4	M10 X 45mm Bolt	2
5	Functional Side Frame	1

4. If installing flip step assembly where shelves are already in place, remove the bottom hardware from shelf and loosen the top hardware.

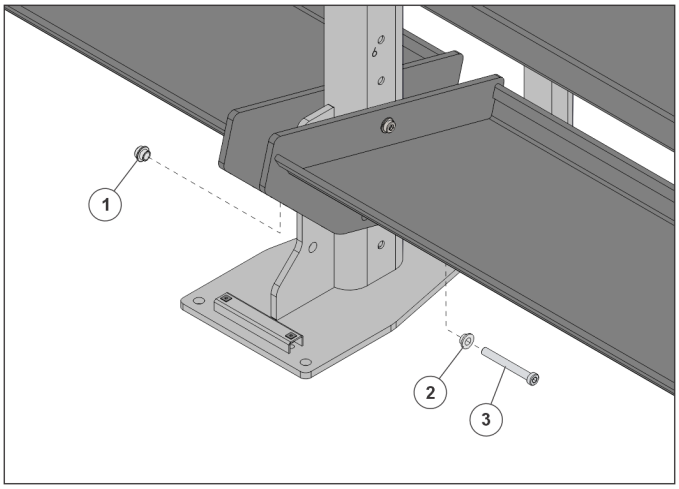

Item	Description	Qty.
1	Socket Nut	1
2	Pulley Retainer	1
3	M10 X 80mm Bolt	1

5. Carefully tilt the shelf out of the way.

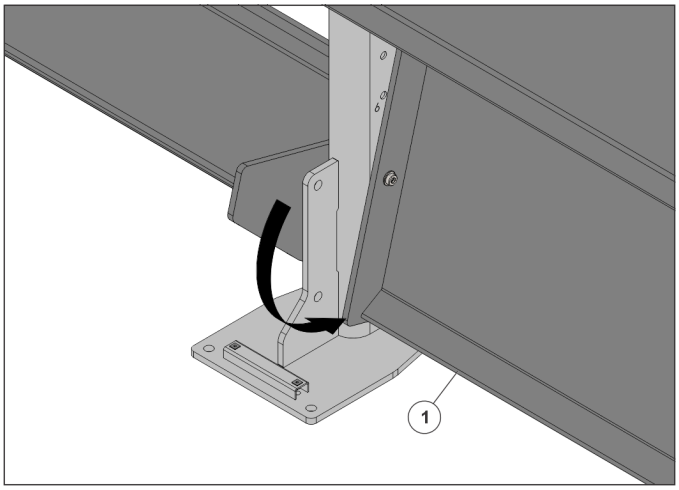

Item	Description	Qty.
1	Shelf	1

6. Attach the flip step assembly to the side frame with hardware and tighten to **20-29 ft-lbs/27.1-39.3 Nm**.

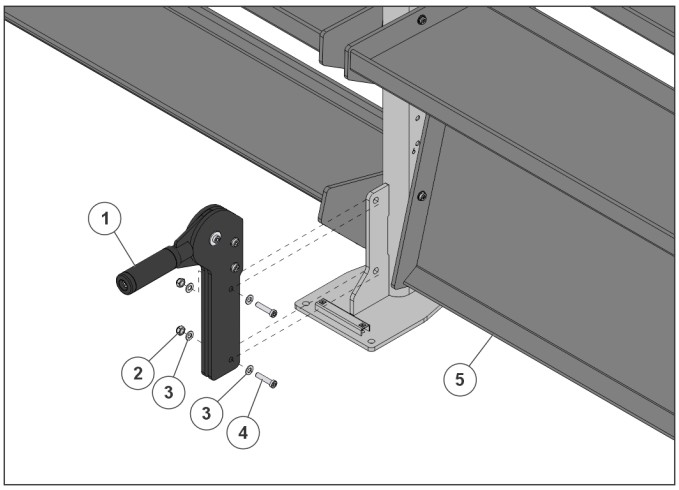

Item	Description	Qty.
1	Flip Step Assembly	1
2	M10 Nut Hex Nylock	2
3	Washer: 3/8 X 0.81 X 0.06, FL, SS	4
4	M10 X 45mm Bolt	2
5	Shelf	1

7. Return the shelf and hardware and tighten to **20-29 ft-lbs/27.1-39.3 Nm**.

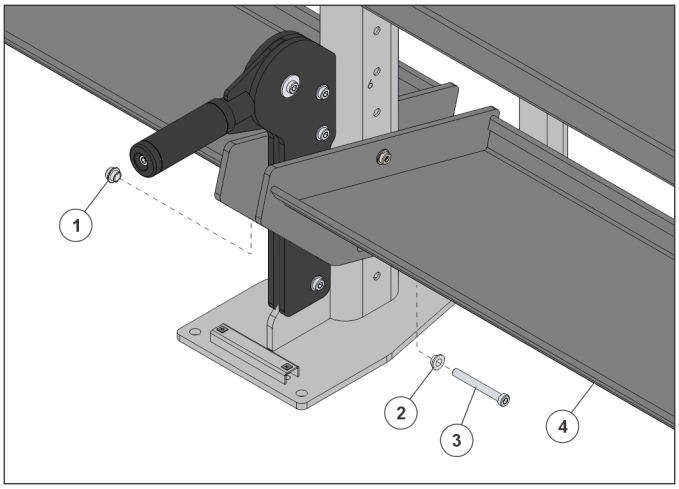

Item	Description	Qty.
1	Socket Nut	1
2	Pulley Retainer	1
3	M10 X 80mm Bolt	1
4	Shelf	1

4. Assembly: Side Frames

Side Frame, Cable Components

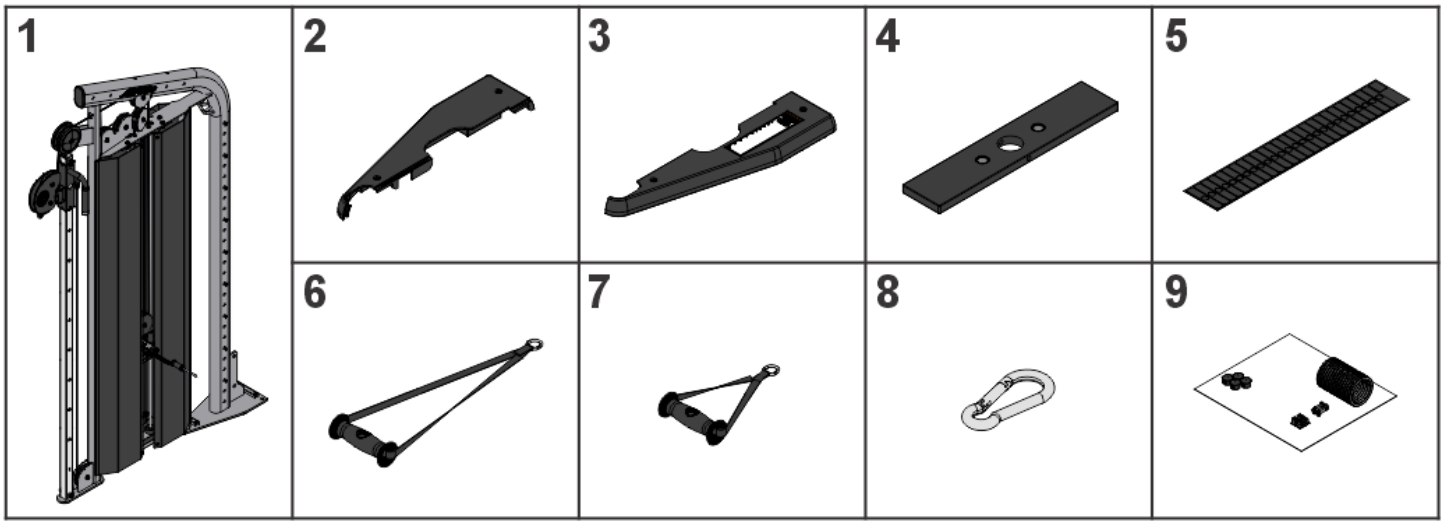

Item	Description	Qty.
1	Cable Side Frame	1
2	Left Foot Cover	1
3	Right Foot Cover	1
4	Weight Plate	25
5	Weight Stack Label (lb or kg)	1
6	Long Handle	1
7	Short Handle	1
8	Snap Link	1
9	Hardware Kit	1

Side Frame, Cable Hardware Kit

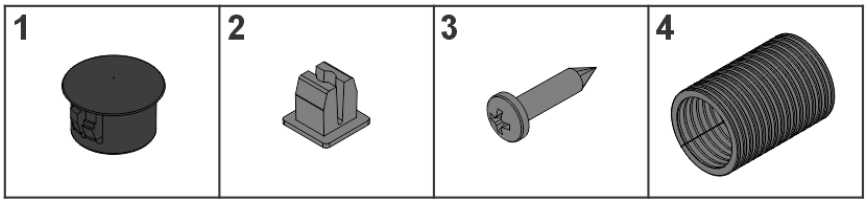

Item	Description	Qty.
1	7/16" Hole Plug	58
2	8 or 10 Screw Grommet	4
3	8 x 3/4 PHL PAN Screw	4
4	Accordion Sleeve	1

Install Side Frame: Cable

Assemble Synrgy Cable Side Frames:

1. Remove the hardware from the front shrouds, if equipped.

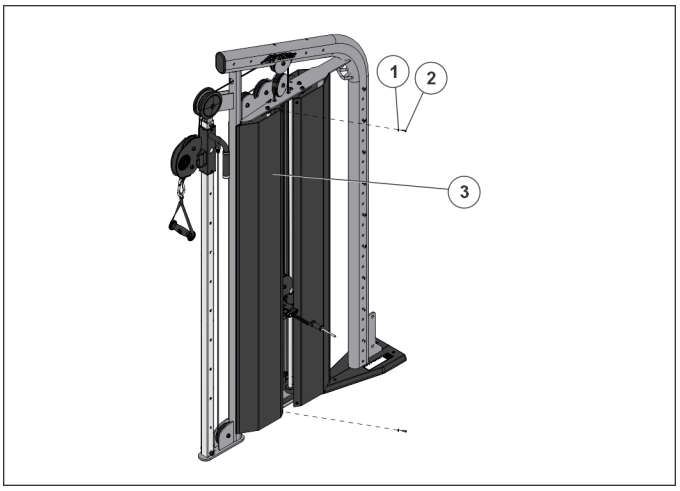

Item	Description	Qty.
1	#10 SAE Washer	2
2	8 X 3/4 PHL PAN Screw	2
3	Front Shroud	1

2. Carefully remove the front shroud from the support rail.

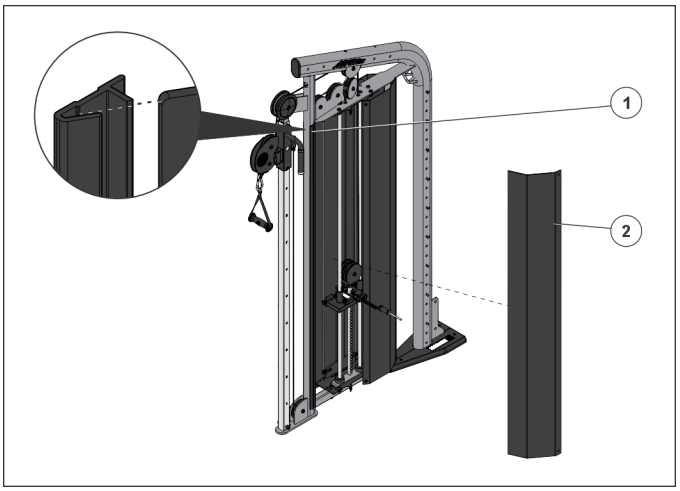

Item	Description	Qty.
1	Support Rail	1
2	Front Shroud	1

3. Make sure weight stack bumpers are at the bottom of the guide rods.

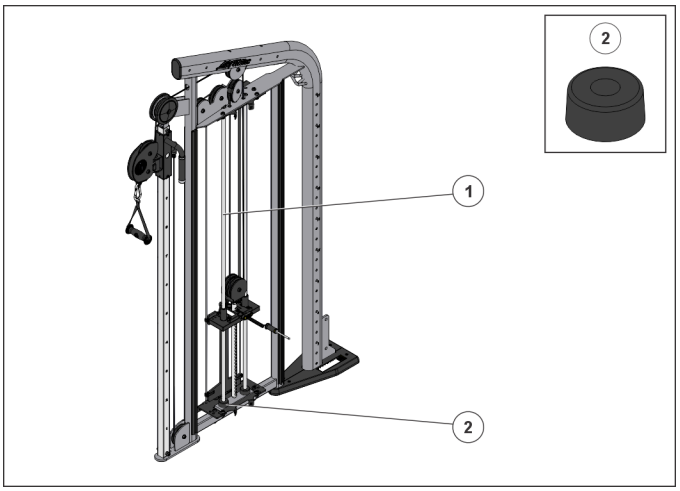

Item	Description	Qty.
1	Guide Rod	2
2	Weight Stack Bumper	2

4. If equipped with front shrouds, loosen and remove top shroud bracket and its hardware.

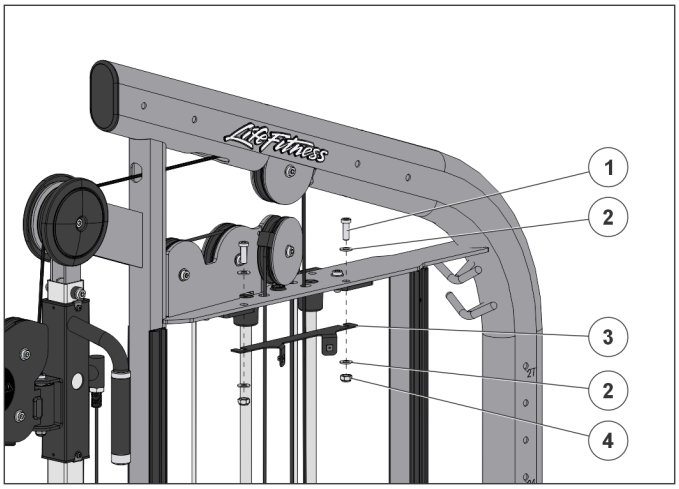

Item	Description	Qty.
1	M10 X 30mm Bolt	2
2	Washer: 3/8 X 0.81 X 0.06, FL, SS	4
3	Top Shroud Bracket	1
4	M10 Nut Hex Nylock	2

5. Pull guide rod housings down to relieve spring pressure.

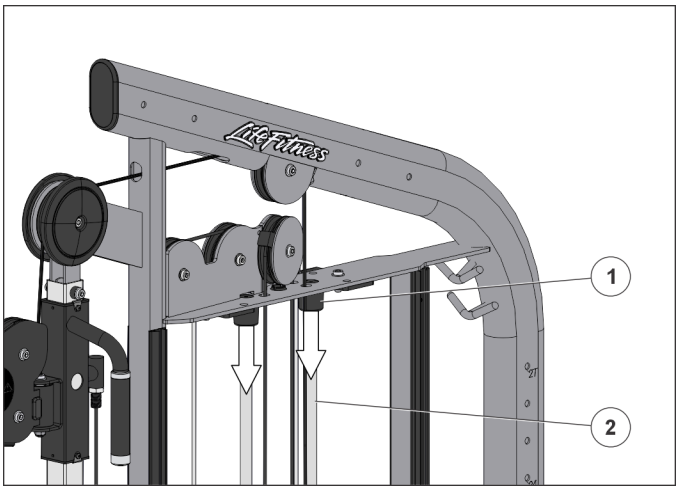

Item	Description	Qty.
1	Guide Rod Housing	2
2	Guide Rod	2

6. Once lowered, tilt guide rod housing, spring and guide rods so the guide rod housings and springs can be removed.

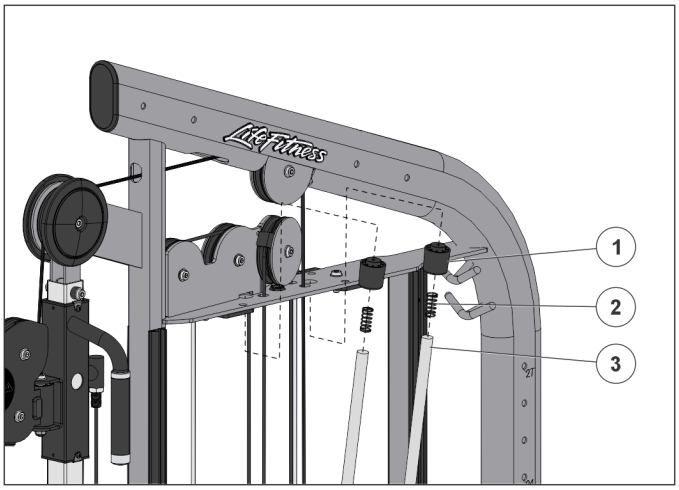

Item	Description	Qty.
1	Guide Rod Housing	2
2	Spring	2
3	Guide Rod	2

7. Raise headplate assembly over guide rods, then carefully add weight plates.

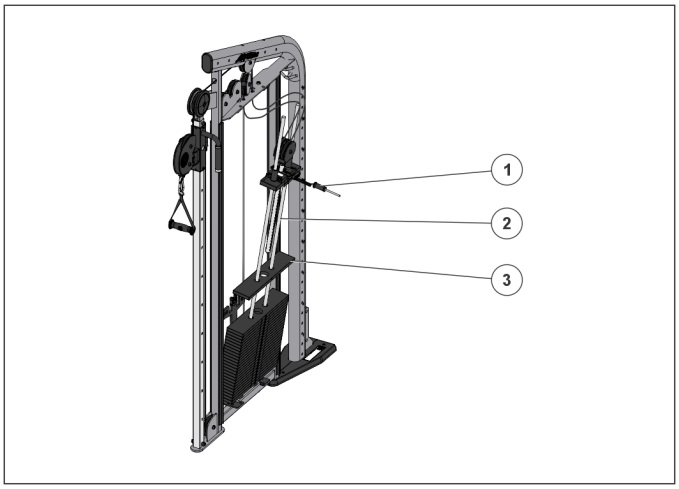

Item	Description	Qty.
1	Headplate Assembly	1
2	Guide Rod	2
3	Weight Plate	25

8. Replace the springs and guide rods housings onto the guide rods, then depress spring to allow the guide rod housings to snap into place.

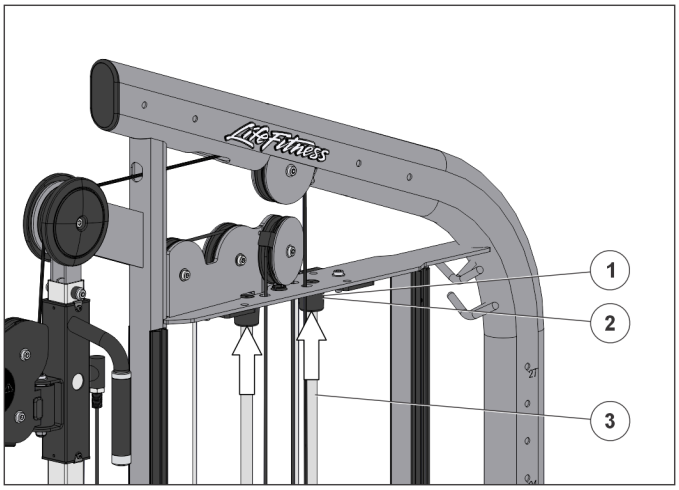

Item	Description	Qty.
1	Guide Rod Housing	2
2	Spring	2
3	Guide Rod	2

9. If equipped with front shrouds, replace top shroud bracket and its hardware. Tighten to **20-29 ft-lbs/27.1-39.3 Nm**.

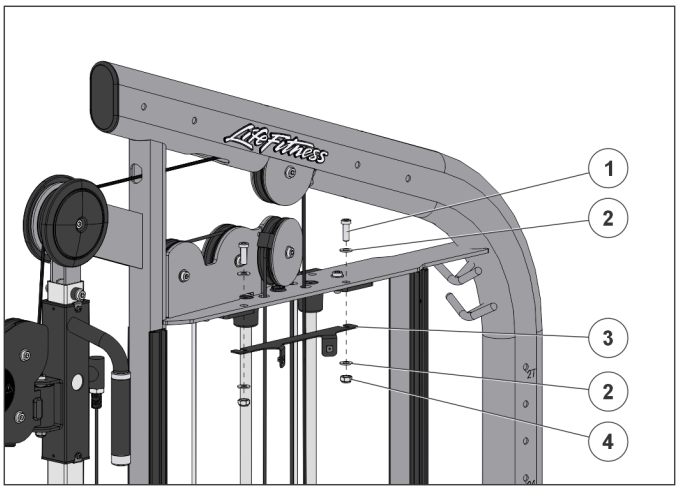

Item	Description	Qty.
1	M10 X 30mm Bolt	2
2	Washer: 3/8 X 0.81 X 0.06, FL, SS	4
3	Top Shroud Bracket	1
4	M10 Nut Hex Nylock	2

10. Peel backing off weight stack label. Align top hole to bottom hole, press firmly against weight plates and slowly peel off laminate.

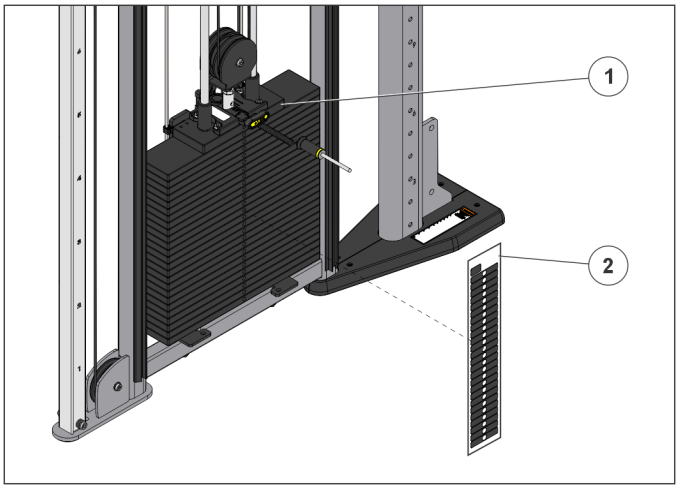

Item	Description	Qty.
1	Weight Stack	1
2	Weight Stack Label	1

11. Carefully insert the front shroud into the support rail.

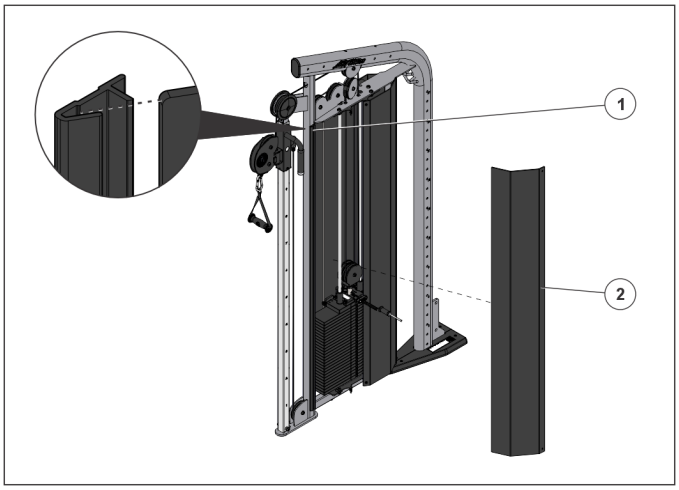

Item	Description	Qty.
1	Support Rail	1
2	Front Shroud	1

12. Attach hardware to front shrouds and tighten to **16-20 in-lbs/ 1.8-2.2 Nm**.

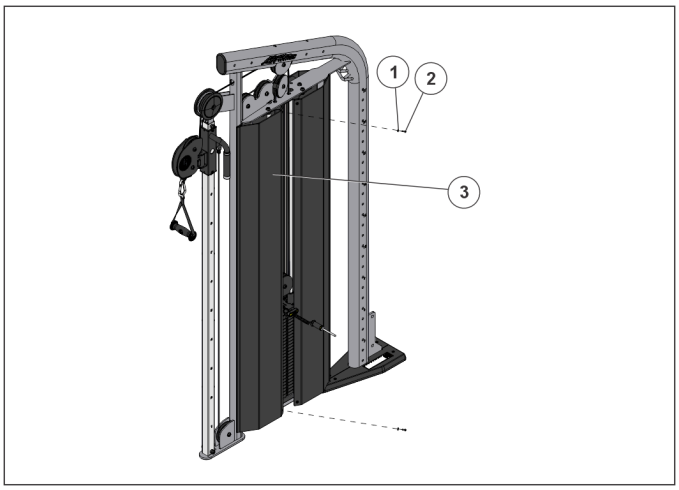

Item	Description	Qty.
1	#10 SAE Washer	2
2	8 X 3/4 PHL PAN Screw	2
3	Front Shroud	1

Side Frame, Functional Components

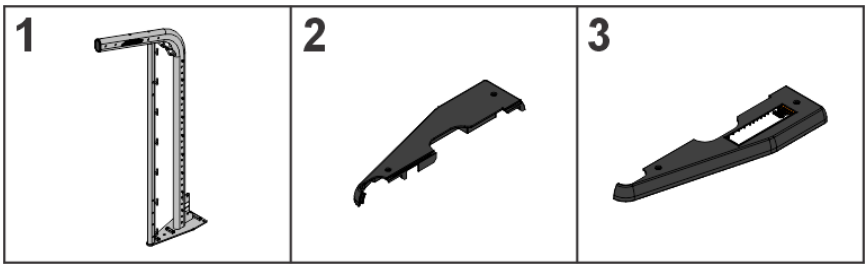

Item	Description	Qty.
1	Functional Side Frame	1
2	Left Foot Cover	1
3	Right Foot Cover	1

Side Frame, Functional Hardware Kit

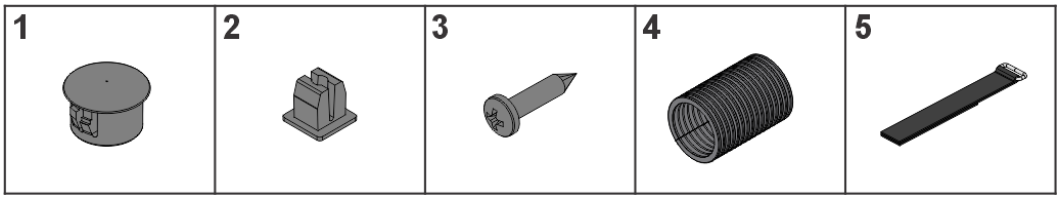

Item	Description	Qty.
1	7/16" Hole Plug	58
2	8 or 10 Screw Grommet	6
3	8 x 3/4 PHL PAN Screw	6
4	Accordion Sleeve	1
5	Suspension Training Strap	1

5. Assembly: Extension Legs

Extension Leg Components

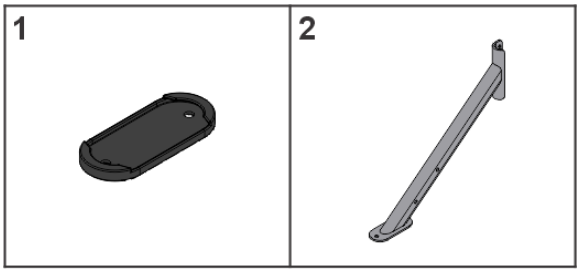

Item	Description	Qty.
1	Foot Slipper	1
2	Extension Leg Weldment	1

Extension Leg Hardware Kit

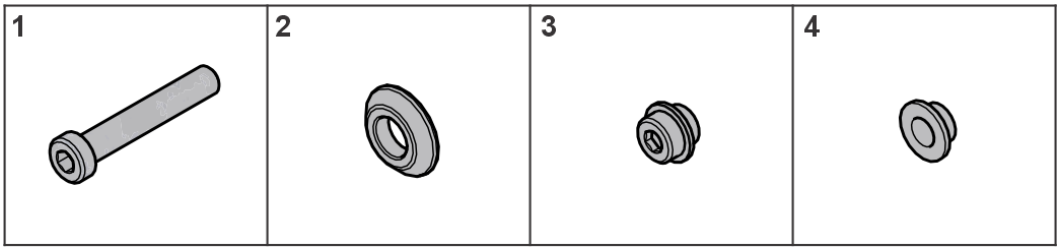

Item	Description	Qty.
1	M10 X 60mm Bolt	2
2	1-1/4 OD x 1/4 Spacer	2
3	Socket Nut	2
4	Pulley Retainer	2

Install Extension Leg

Install Extension Leg Option (if equipped):

1. Gently tap the foot slipper onto the extension leg weldment.

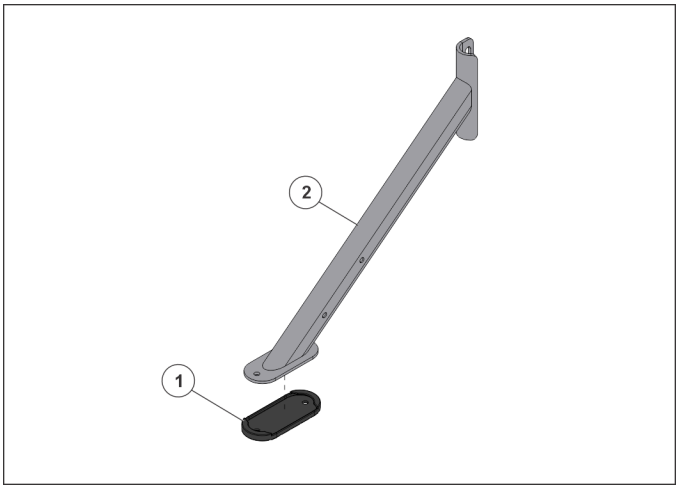

Item	Description	Qty.
1	Extension Leg Weldment	1
2	Foot Slipper	1

2. Attach the extension leg assembly to the side frame with its hardware, then tighten to **20-29 ft-lbs/27.1-39.3 Nm**.

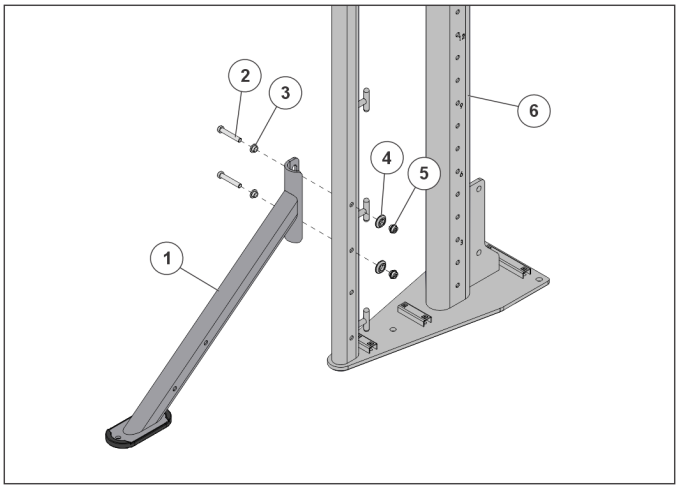

Item	Description	Qty.
1	Extension Leg Assembly	1
2	M10 X 60mm Bolt	2
3	Pulley Retainer	2
4	1-1/4 OD x 1/4 Spacer	2
5	Socket Nut	2
6	Side Frame	1

6. Assembly: Freestanding System

Freestanding System Components

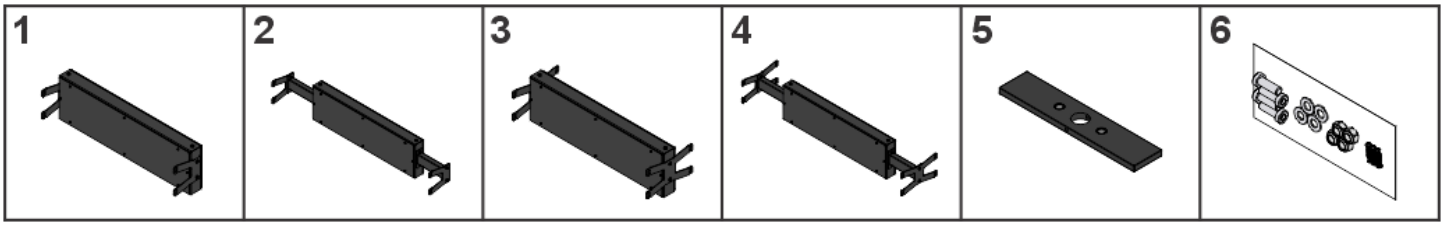

Item	Description	Qty.
1	Ballast Assembly, Single Bracket - 4ft/1.2m	1
2	Ballast Assembly, Single Bracket - 6ft/1.8m	1
3	Ballast Assembly, Back-to-Back Bracket - 4ft/1.2m	1
4	Ballast Assembly, Back-to-Back Bracket - 6ft/1.8m	1
5	20 Pound Weight Plate	24
6	Hardware Kit	1

Ballast Box Hardware Kit

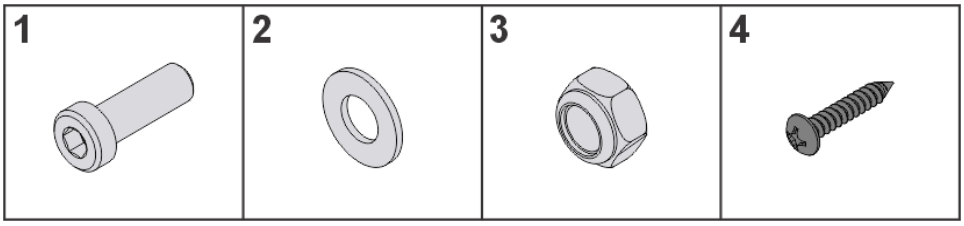

Item	Description	Qty.
1	M10 X 30mm Bolt	4
2	Washer: 3/8 X 0.81 X 0.06, FL, SS	4
3	M10 Nut	4
4	6 X 3/4 PHL PAN Screw	6

Ballast to Side Frame Hardware Kit

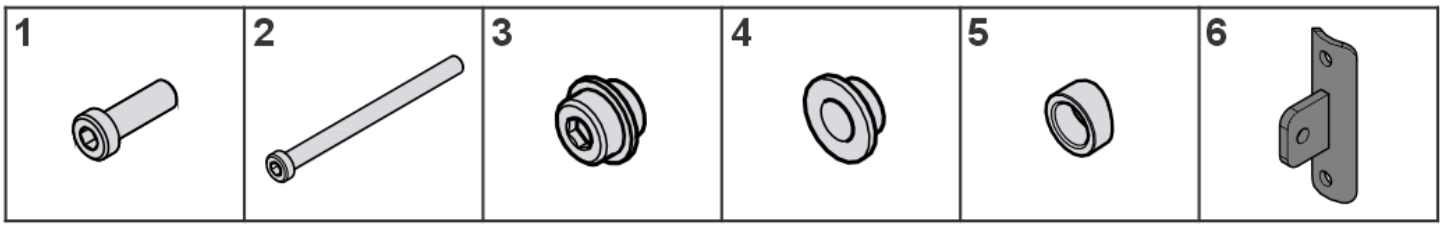

Item	Description	Qty.
1	M10 X 20mm Bolt	2
2	M10 X 130mm Bolt	2
3	Socket Nut	4
4	Pulley Retainer	4
5	Concave Spacer	2

Item	Description	Qty.
6	Bracket Weldment	1

Ballast Spacers Hardware Kit

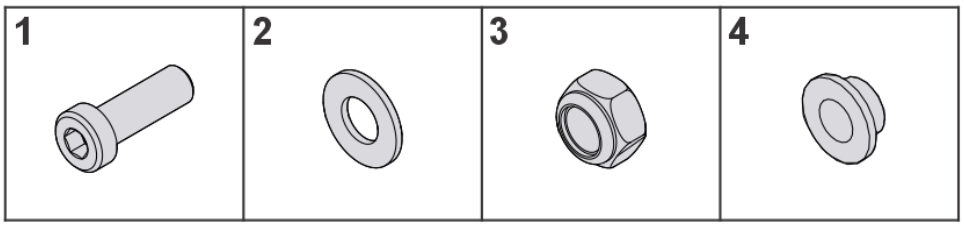

Item	Description	Qty.
1	M10 X 35mm Bolt	2
2	Washer: 3/8 X 0.81 X 0.06, FL, SS	2
3	M10 Nut	2
4	Pulley Retainer	2

Install Freestanding System

The freestanding system can be assembled from the front or rear. Follow these steps to complete assembly for units equipped with the freestanding system.

1. For Earlier Side Frames:
Attach the bracket weldment to the side frame with its hardware and tighten to **20-29 ft-lbs/27.1-39.3 Nm**.

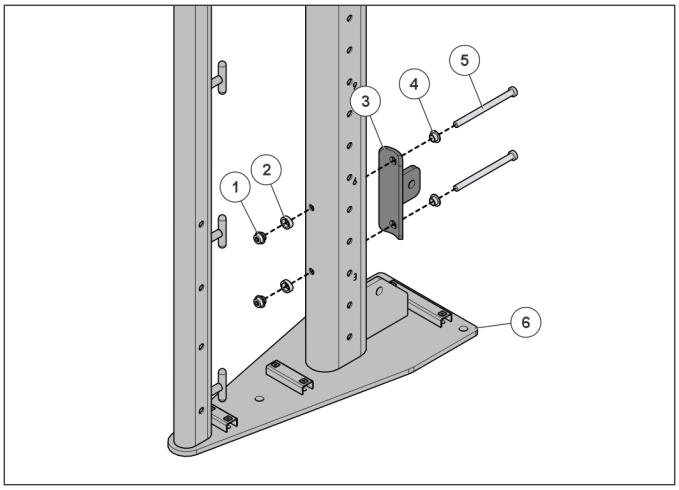

Item	Description	Qty.
1	Socket Nut	2
2	Concave Spacer	2
3	Bracket Weldment	1
4	Pulley Retainer	2
5	M10 X 130mm Bolt	2
6	Side Frame (past design)	1

NOTE: Repeat process on opposite side frame.

2. Set the ballast box into position and remove the 8 screws from the panel and the 3 top screws from the opposite side.

Rear Assembly

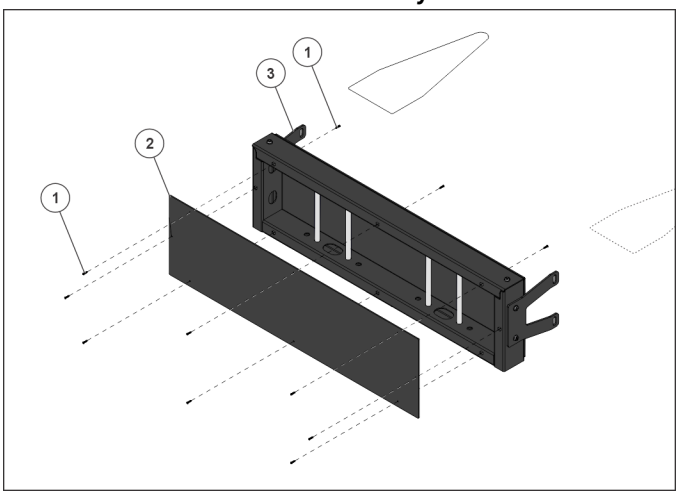

Front Assembly

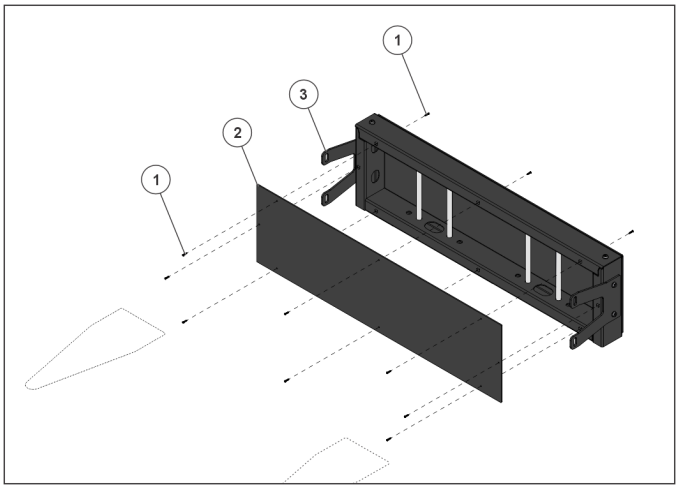

Item	Description	Qty.
1	Screw, 6 x 3/4 DIN PHL PAN	11
2	Panel	1
3	Ballast Box	1

3. Remove the hardware and ballast box tube and set aside.

Rear Assembly

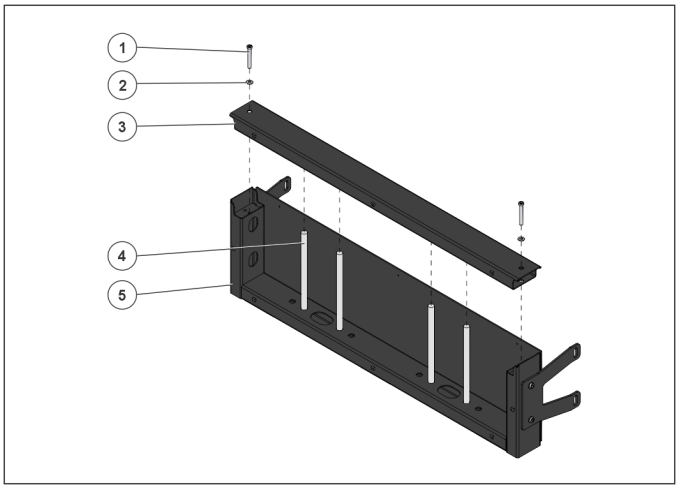

Front Assembly

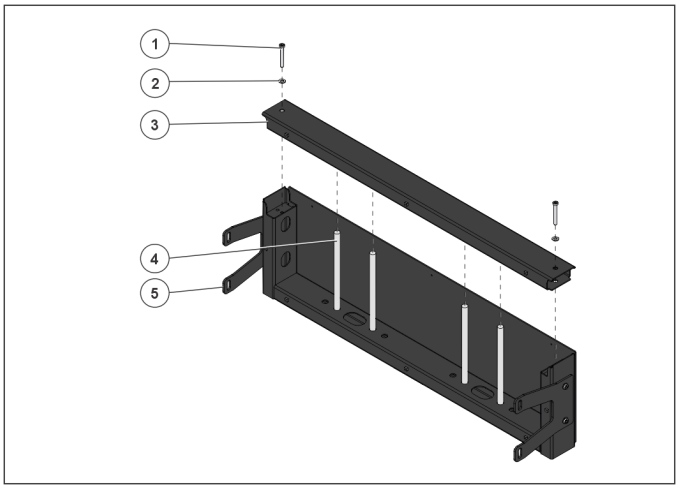

Item	Description	Qty.
1	Screw, M10 x 1.5 30mm	2
2	Washer, 3/8 SS	2
3	Ballast Box Tube	1
4	Guide Rod	4
5	Ballast Box	1

4. Mount the ballast box frame to the side frames.

Rear Assembly

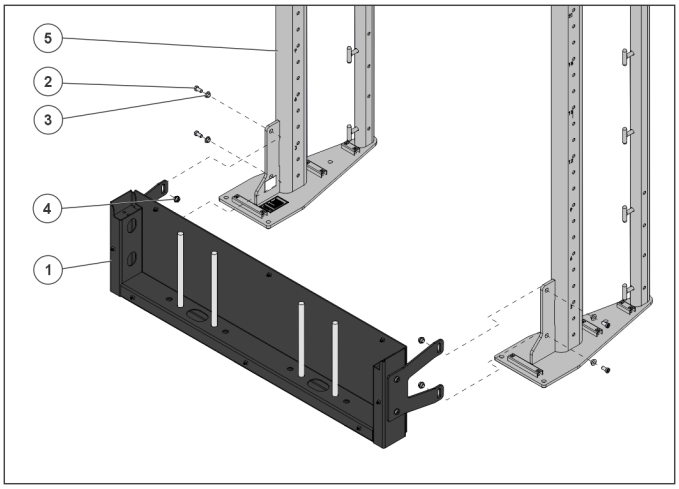

Front Assembly

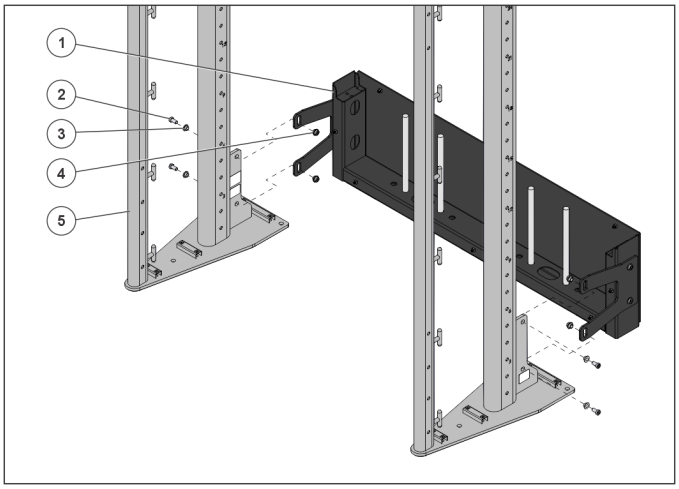

Item	Description	Qty.
1	Ballast Box Frame	1
2	Screw, M10 x 1.5 30mm	4
3	Washer: 3/8 X 0.81 X 0.06, FL, SS	4
4	Socket Head Nut	4
5	Side Frame	2

Ballast boxes can also be used in back-to-back and side-by-side orientations; note the different brackets used.

Back-to-Back

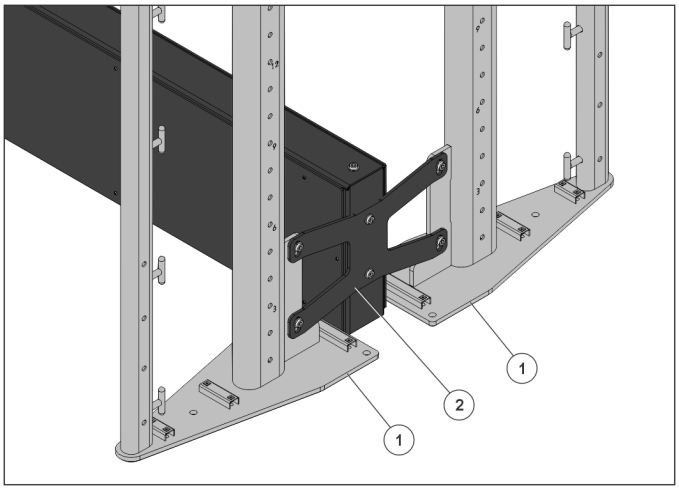

Side-by-Side

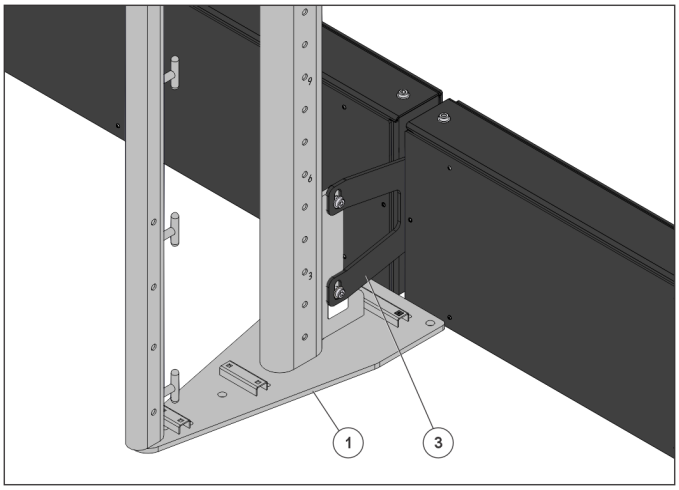

Item	Description	Qty.
1	Side Frame	1/2
2	Back-to-Back Bracket	1
3	Side-by-Side Bracket	1

5. Carefully load 12 weight plates onto each set of guide rods.

Rear Assembly

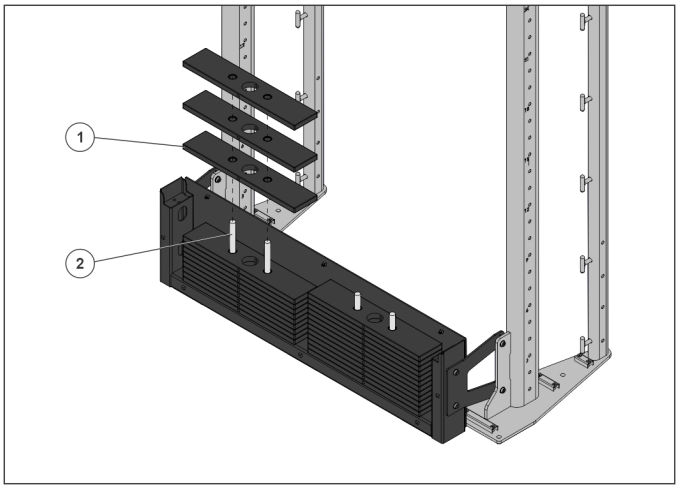

Front Assembly

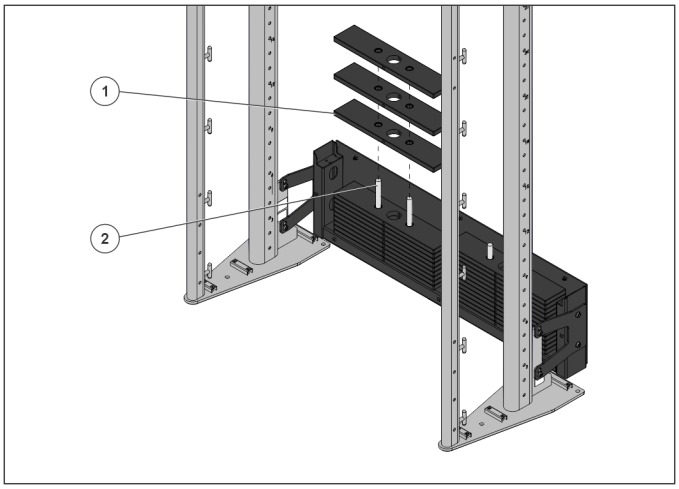

Item	Description	Qty.
1	Weight Plate	24
2	Guide Rod	4

6. Replace the ballast box top tube and its hardware and tighten to **20-29 ft-lbs/27.1-39.3 Nm**.

Rear Assembly

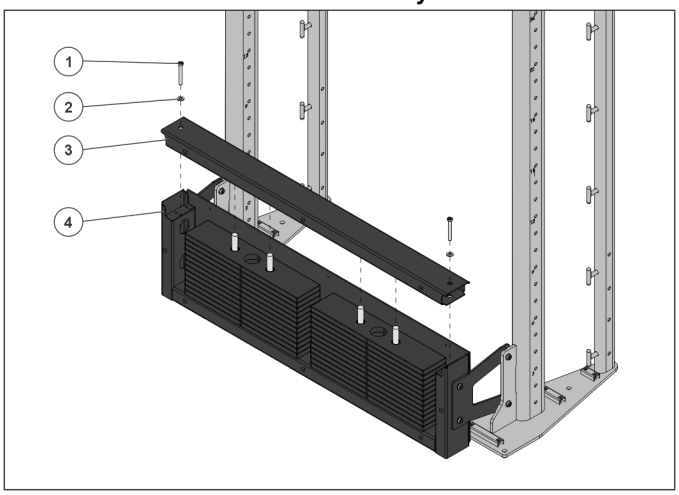

Front Assembly

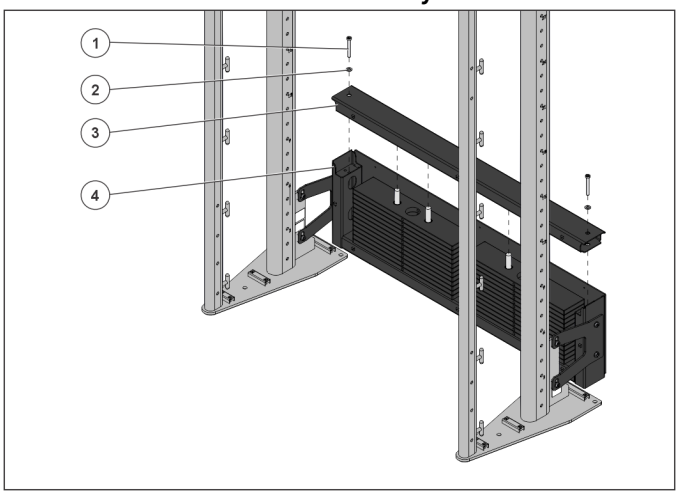

Item	Description	Qty.
1	Screw, M10 x 1.5 30mm	2
2	Washer, 3/8 SS	2
3	Ballast Box Tube	1
4	Ballast Box	1

7. Replace the 8 screws from the panel and the 3 top screws from the opposite side and tighten to **16-20 in-lbs/ 1.8-2.2 Nm**.

Rear Assembly

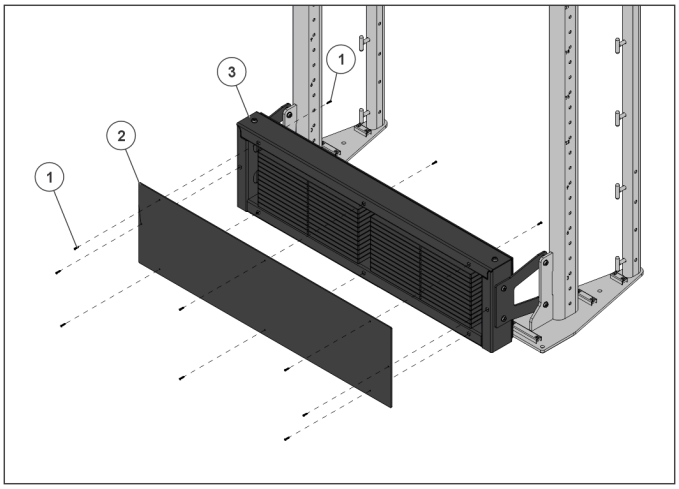

Front Assembly

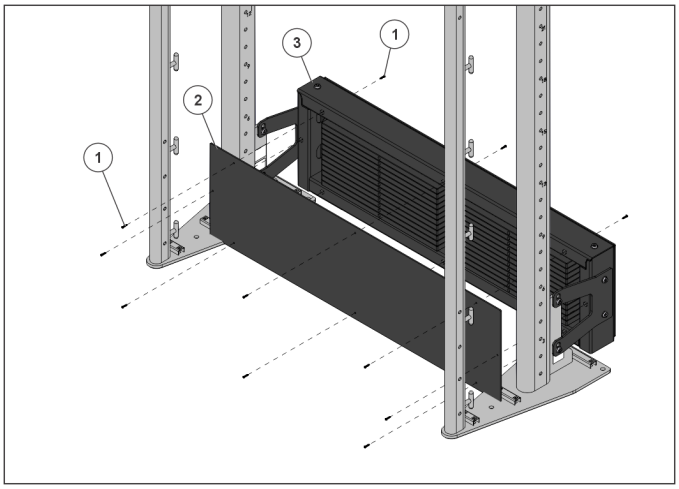

Item	Description	Qty.
1	Screw, 8 x 3/4 DIN PHL PAN	11
2	Panel	1
3	Ballast Box	1

7. Assembly: Chin

Chin Components

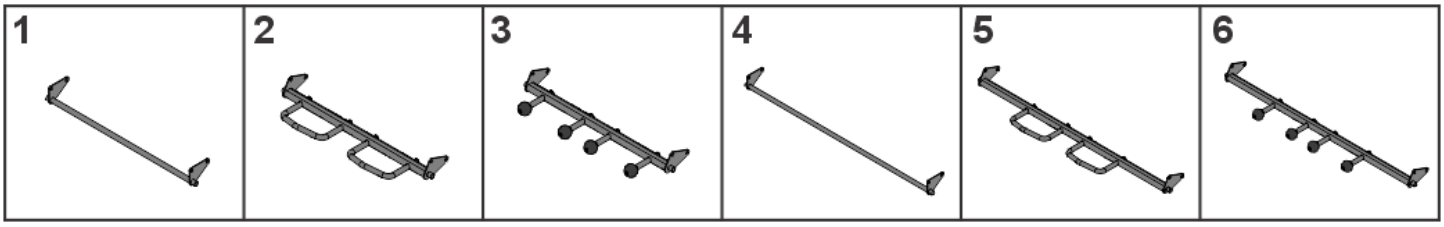

Item	Description	Width
1	Straight Grip	4ft/1.2m
2	Multi Grip	
3	Ball Grip	
4	Straight Grip	6ft/1.8m
5	Multi Grip	
6	Ball Grip	

Chin Hardware Kit

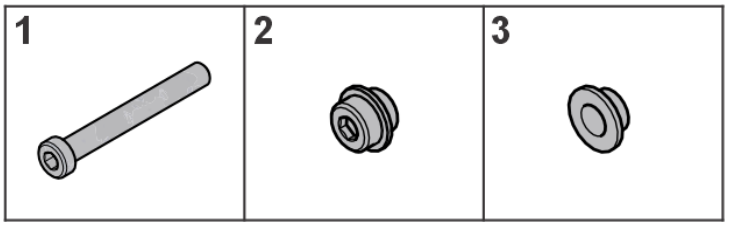

Item	Description	Qty.
1	M10 X 80mm Bolt	4
2	Socket Nut	4
3	Pulley Retainer	4

Install Chin Option

Install Chin Option (if equipped):

1. Loosely install chin option and hardware.

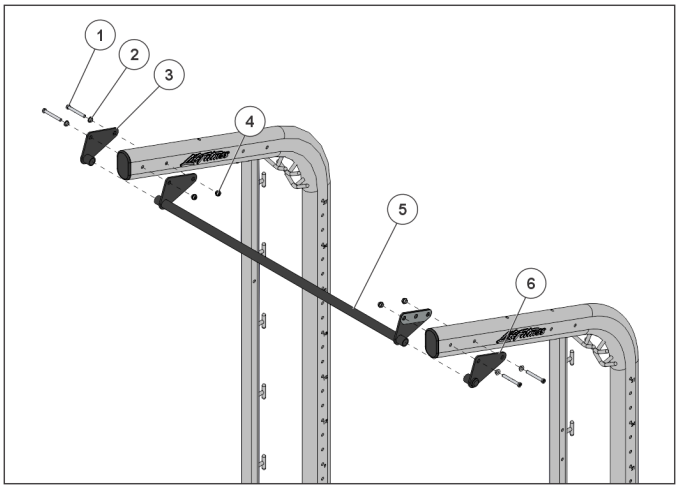

Item	Description	Qty.
1	M10 X 80mm Bolt	4
2	Pulley Retainer	4
3	Left Body Weight Training Anchor	1
4	Socket Nut	4
5	Chin Option	1
6	Right Body Weight Training Anchor	1

NOTE: Body Weight Training Anchors used only when terminating Left and Right ends of unit.

2. Finish chin up ends (confirm with facility owner which option they prefer):
Route suspension anchor around each end, or slide chin cover over each end.

Suspension Anchor

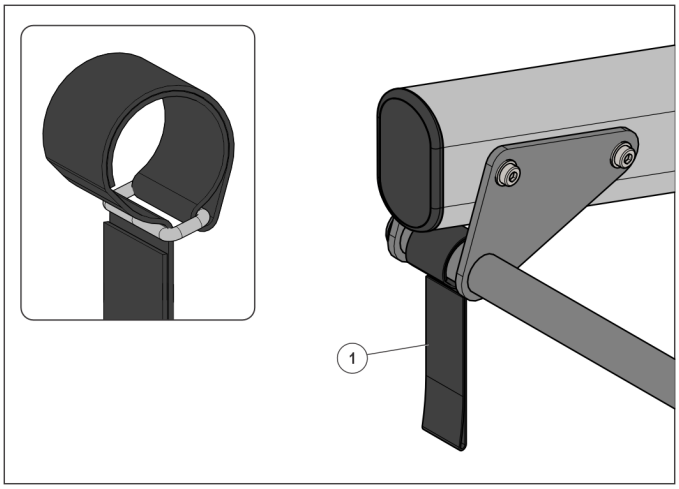

Chin Cover

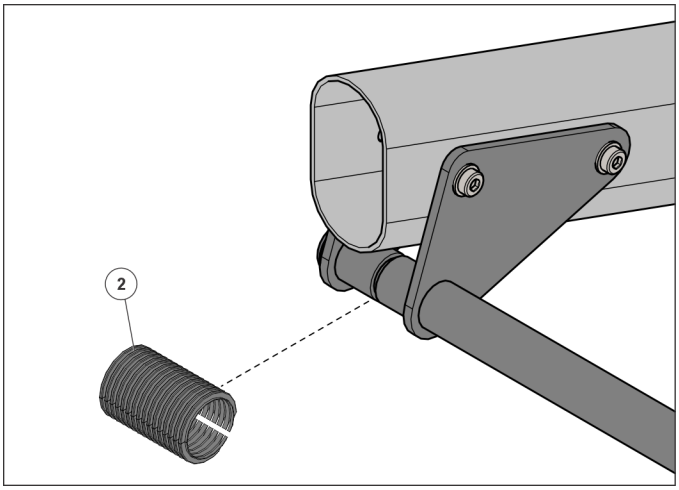

Item	Description	Qty.
1	Suspension Anchor	1
2	Chin Cover	1

NOTE: Give leftover ends to facility owner.

8. Assembly: Stability Ball Storage

Stability Ball Storage Components

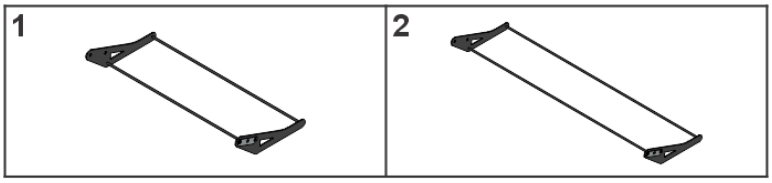

Item	Description	Width
1	Stability Ball Storage	4ft/1.2m
2	Stability Ball Storage	6ft/1.8m

Stability Ball Storage Hardware Kit

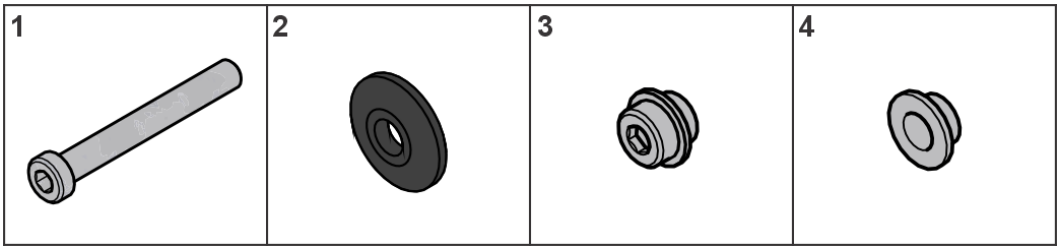

Item	Description	Qty.
1	M10 X 80mm Bolt	4
2	Backing Washer	4
3	Socket Nut	4
4	Pulley Retainer	4

Install Stability Ball Storage

Install Stability Ball Storage (if equipped):

Loosely install stability ball storage and hardware to the side frames.

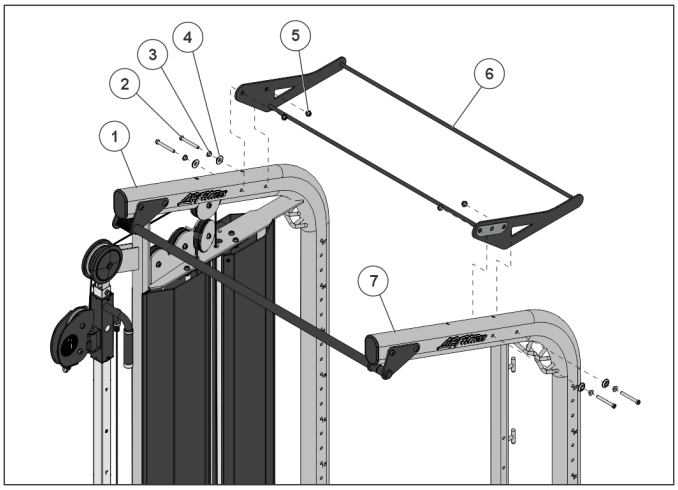

Item	Description	Qty.
1	Cable Side Frame	1
2	M10 X 80mm Bolt	4
3	Pulley Retainer	4
4	Backing Washer	4
5	Socket Nut	4
6	Stability Ball Storage	1
7	Functional Side Frame	1

9. Assembly: Shelf

Shelf Components

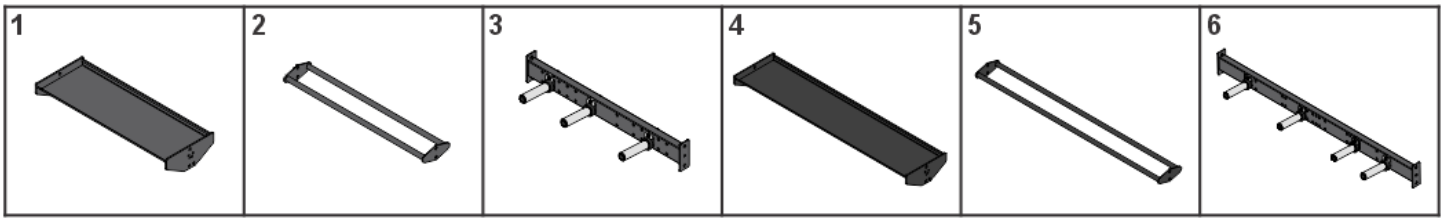

Item	Description	Width
1	Accessory/Dumbbell Shelf	4ft/1.2m
2	Dual Rail Shelf	
3	Weight Plate Shelf	
4	Accessory/Dumbbell Shelf	6ft/1.8m
5	Dual Rail Shelf	
6	Weight Plate Shelf	

Shelf Installation Information

The Accessory/Dumbbell shelves can pivot fifteen degrees by installing with the front or rear bolt holes. 0 degree for accessories and 15 degrees for dumbbells. Check with customer for preference.

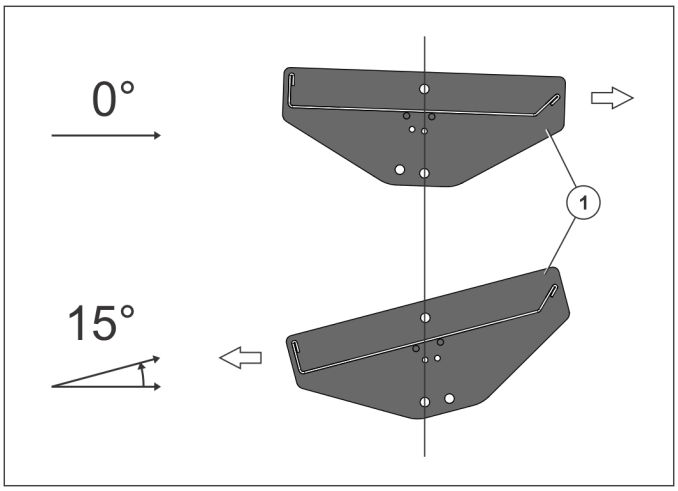

Item	Description	Qty.
1	Accessory/Dumbbell Shelf	1

NOTE: White arrows face front.

Do not use backing washers when assembling two shelves that share side frame holes. Screws will otherwise be too short.

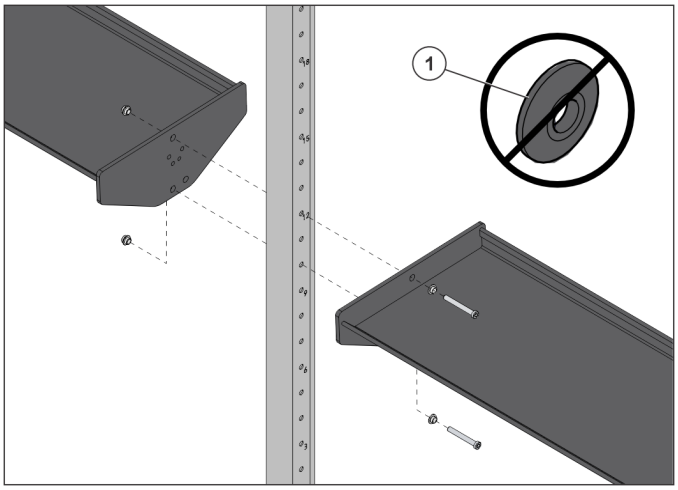

Item	Description	Qty.
1	Backing Washer	1

Weight horns can be placed along the weight plate storage shelves in numerous locations to accommodate different size weight plates. 4 foot sections come with 3 weight horns and 6 foot sections come with 4 weight horns. Additional weight horns can be added via SYN-SID or through Service. See Install Weight Plate Shelf Option for example layouts.

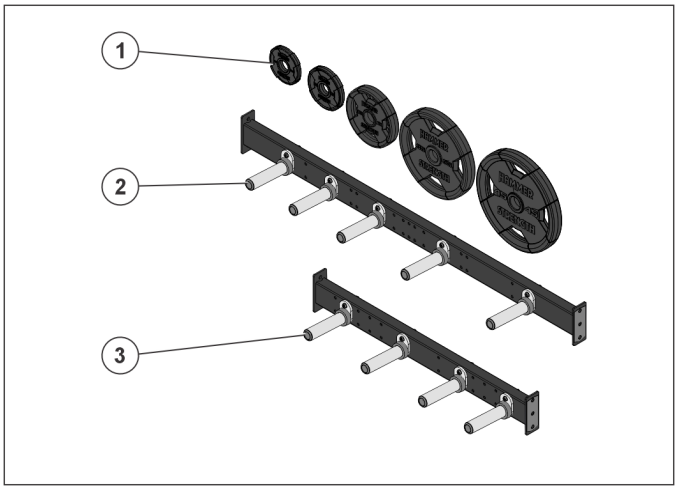

Item	Description	Weight Horn Qty.
1	Weight Plates	-
2	Weight Plate Shelf Assembly - 4 Foot	3
3	Weight Plate Shelf Assembly - 6 Foot	4

Shelf Hardware Kit

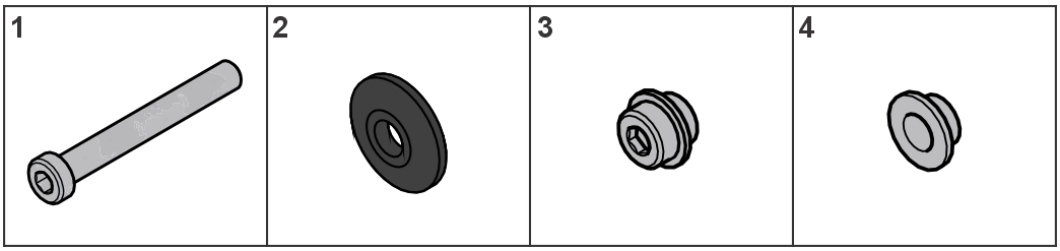

Item	Description	Qty.
1	M10 X 80mm Bolt	4
2	Backing Spacer	4
3	Socket Nut	4
4	Pulley Retainer	4

Shelf Hardware Kit: Accessory/Dumbbell

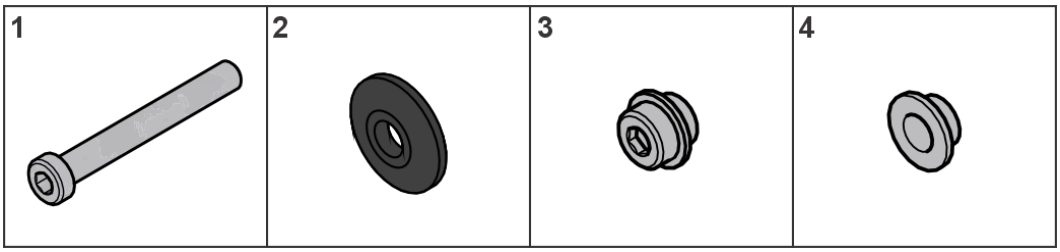

Item	Description	Qty.
1	M10 X 85mm Bolt	4
2	Backing Spacer	4
3	Socket Nut	4
4	Pulley Retainer	4

Shelf Hardware Kit: Weight Horn

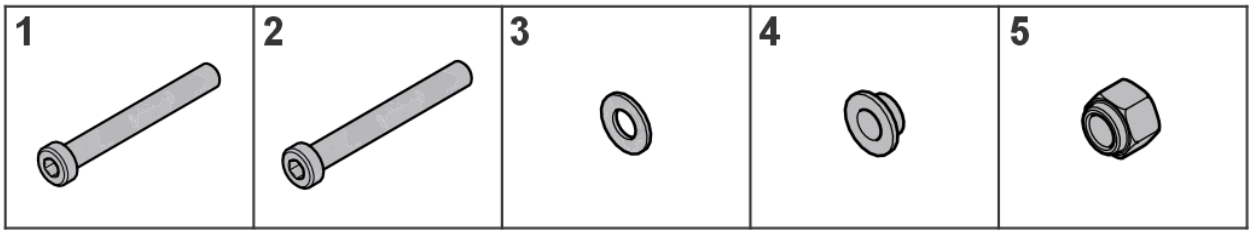

Item	Description	Qty.
1	M10 X 65mm Bolt	1
2	M10 X 75mm Bolt	1
3	Washer: 3/8 X 0.81 X 0.06, FL, SS	2
4	Pulley Retainer	1
5	M10 Nut Hex Nylock	1

Install Shelf Option

Install Shelf Option (if equipped):

1. For All Shelves:
Loosely install shelf assembly and hardware.

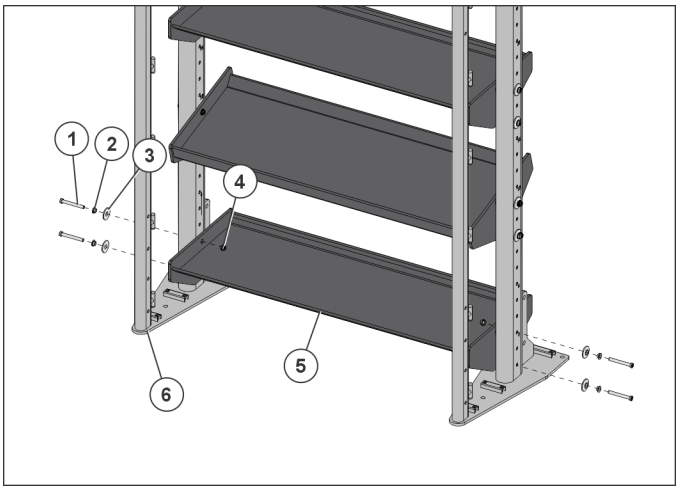

Item	Description	Qty.
1	M10 X 80mm Bolt	4
2	Pulley Retainer	4
3	Backing Spacer	4
4	Socket Nut	4
5	Shelf Assembly	1
6	Side Frame	2

NOTE: Accessory/Dumbbell shelves have thicker end plates and require 85mm length M10 bolts.

2. For All Shelves:
   Add appropriate label to shelves based customer's placement preference: left, middle or right.

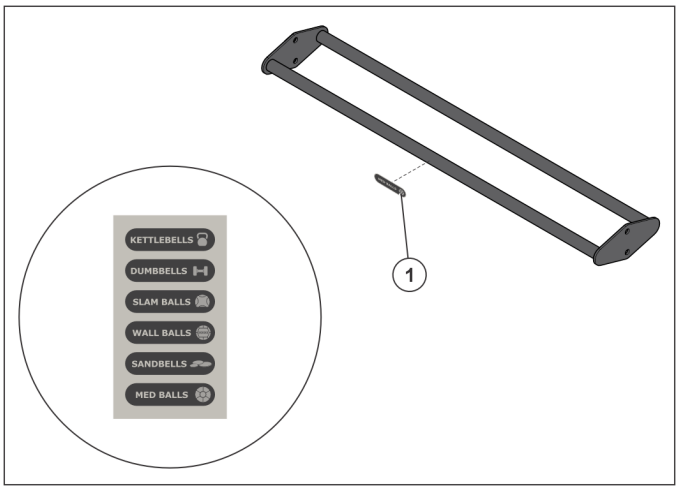

Item	Description	Qty.
1	Shelf Label	1

Install Weight Plate Shelf Option

Install Shelf Option (if equipped):

1. Lengths:
   Weight plate shelf options come in two lengths, 4 foot (121.9cm) and 6 foot (182.8cm). The 4 foot length has 12 sets of weight horn holes and the 6 foot length has 13 sets of weight horn holes. 4 foot lengths come with 3 weight horn assemblies and the 6 foot lengths comes with 4 weight horn assemblies. Additional weight horns can be added via SYN-SIDE or through Service.

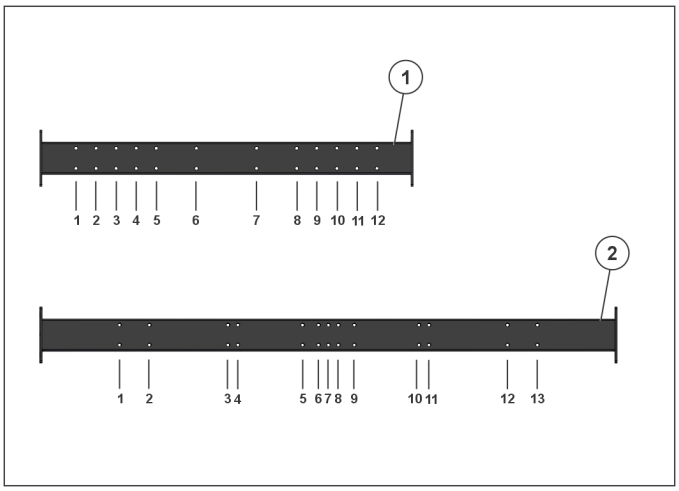

Item	Description	Weight Horn Holes
1	Weight Plate Shelf - 4 Foot	1-12
2	Weight Plate Shelf - 6 Foot	1-13

2. Four Foot Standard:
Install the weight horns at the following hole locations: 2, 6 and 10.

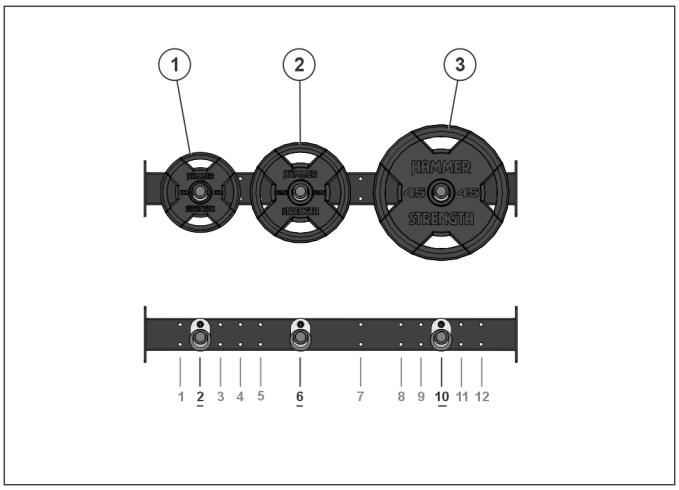

Item	Description	Qty.
1	10 Pound Weight Plate	1
2	25 Pound Weight Plate	1
3	45 Pound Weight Plate	1

3. Four Foot with Extra Weight Horn:
Install the weight horns at the following hole locations: 2, 6, 8 and 12.

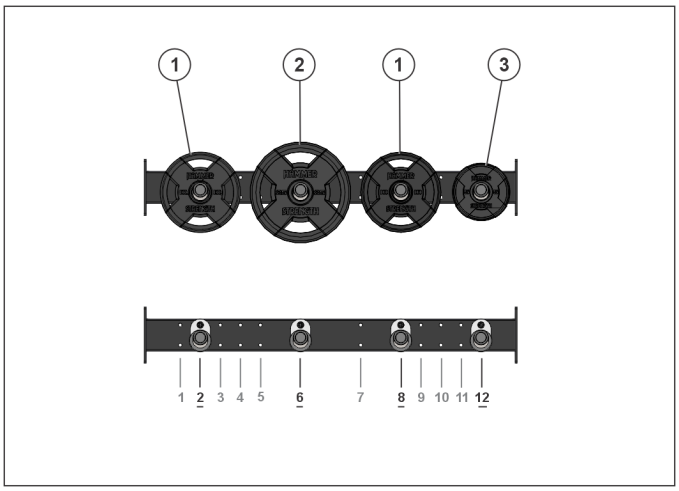

Item	Description	Qty.
1	10 Pound Weight Plate	2
2	25 Pound Weight Plate	1
3	5 Pound Weight Plate	1

4. Four Foot Bumper Plates:
Install the weight horns at the following hole locations: 4 and 9.

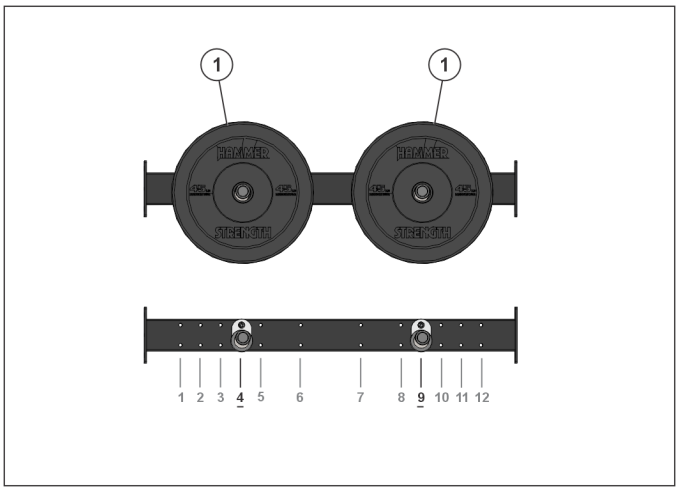

Item	Description	Qty.
1	45 Pound Bumper Plate	2

5. Six Foot Standard:
Install the weight horns at the following hole locations: 2, 5, 11 and 13.

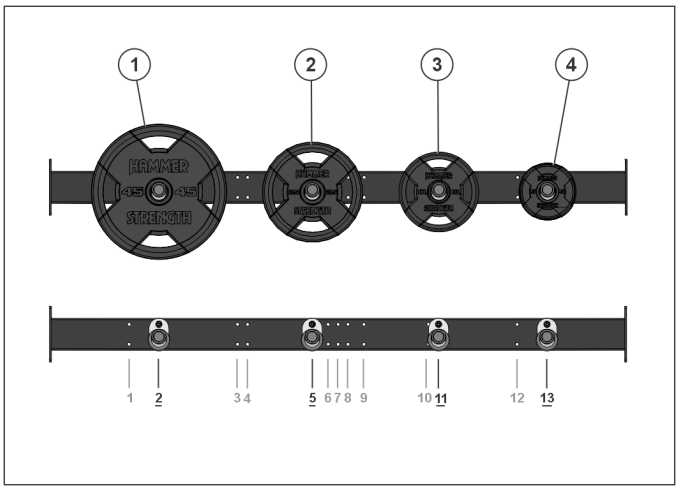

Item	Description	Qty.
1	45 Pound Weight Plate	1
2	25 Pound Weight Plate	1
3	10 Pound Weight Plate	1
4	5 Pound Weight Plate	1

6. Six Foot with Extra Weight Horn:
Install the weight horns at the following hole locations: 1, 3, 6, 10 and 13.

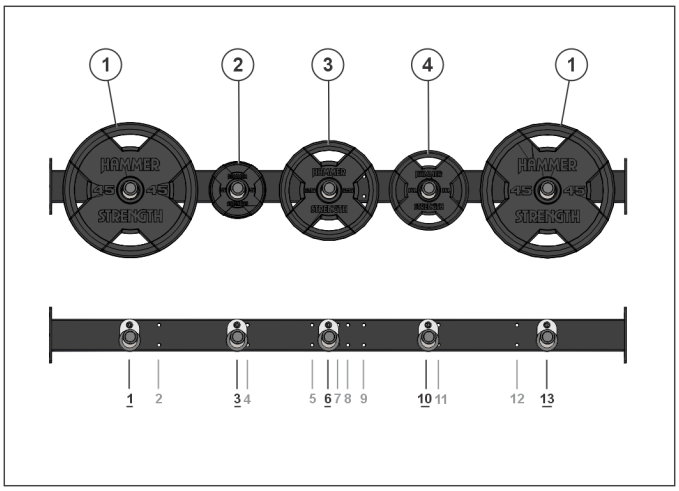

Item	Description	Qty.
1	45 Pound Weight Plate	2
2	5 Pound Weight Plate	1
3	25 Pound Weight Plate	1
4	10 Pound Weight Plate	1

7. Six Foot Bumper Plates:
Install the weight horns at the following hole locations: 2, 7 and 12.

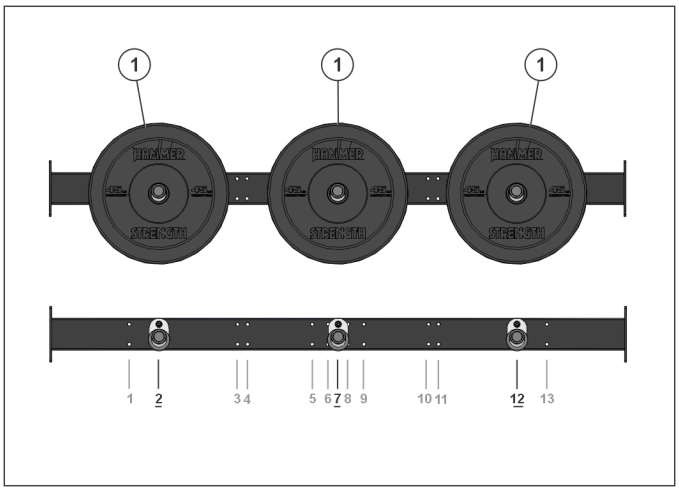

Item	Description	Qty.
1	45 Pound Bumper Plate	3

8. For Weight Plate Shelves:

Attach weight horn assemblies to weight horn shelf and tighten hardware to **20-29 ft-lbs/27.1-39.3 Nm**.

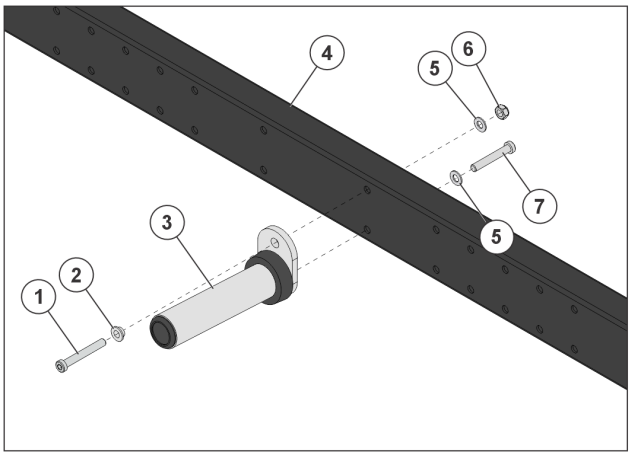

Item	Description	Qty.
1	M10 X 75mm Bolt	1
2	Pulley Retainer	1
3	Weight Horn Assembly	1
4	Weight Horn Shelf	1
5	Washer: 3/8 X 0.81 X 0.06, FL, SS	2
6	M10 Nut Hex Nylock	1
7	M10 X 65mm Bolt	1

10. Assembly: Frame Top

Frame Top Components

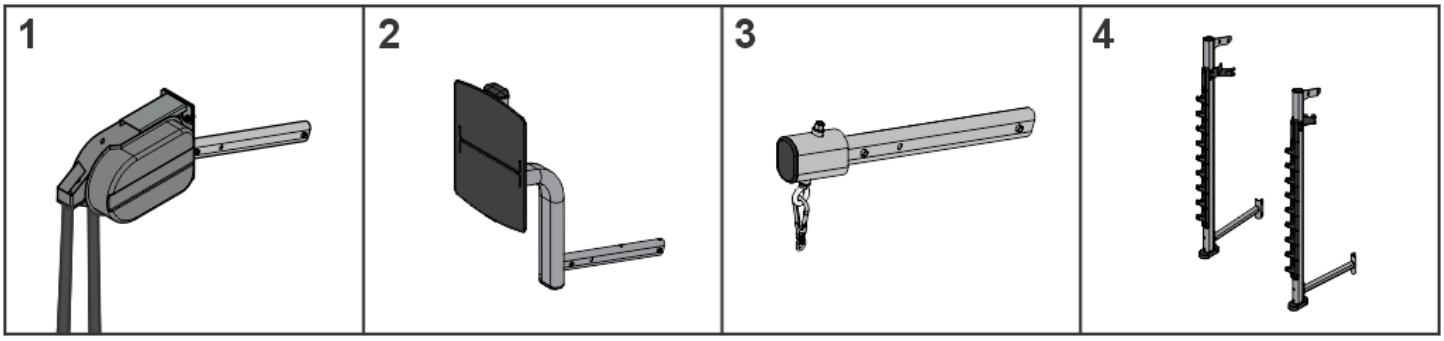

Item	Description
1	Rope Pull
2	Wall Ball Target
3	Heavy Bag Anchor
4	Barbell Training

Barbell Components

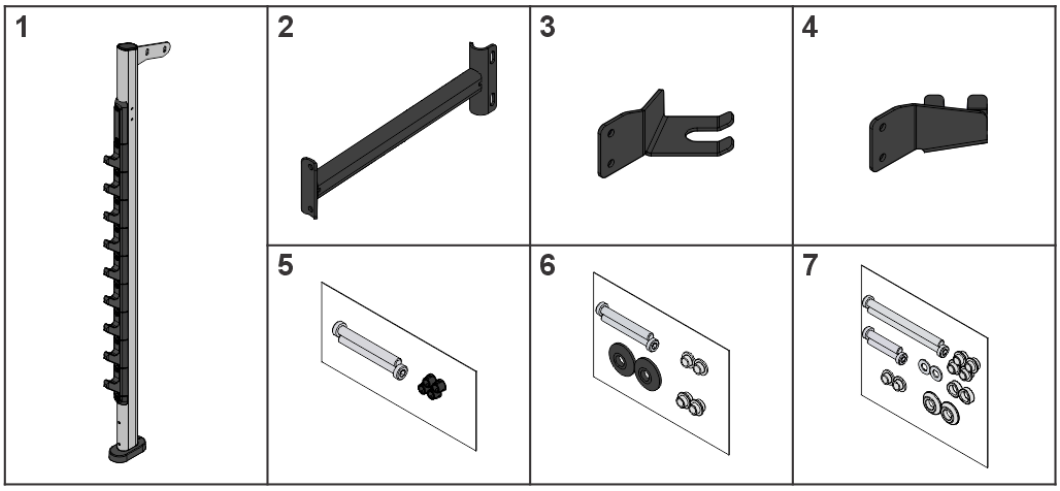

Item	Description	Qty.
1	Olympic Barbell Frame Assembly	2
2	Olympic Bottom Weldment	2
3	Left Bar Hanger Weldment	1
4	Right Bar Hanger Weldment	1
5	Olympic Frame Hardware Kit	1
6	Two 80mm Bolt Hardware Kit	1
7	Bottom Olympic Hardware Kit	1

Barbell Training Hardware Kits

Olympic Frame Hardware kit

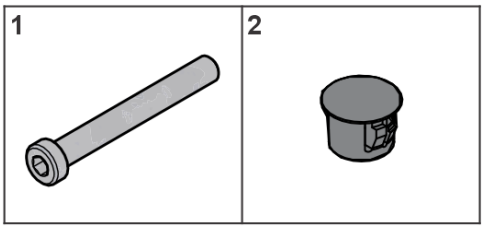

Item	Description	Qty.
1	M10 X 85mm Bolt	2
2	7/16" Hole Plug	4

Two 80mm Bolt Hardware Kit

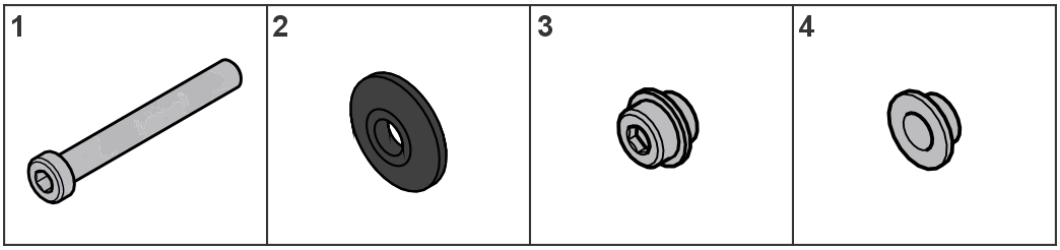

Item	Description	Qty.
1	M10 X 80mm Bolt	2
2	Backing Washer	2
3	Socket Nut	2
4	Pulley Retainer	2

Bottom Olympic Hardware Kit

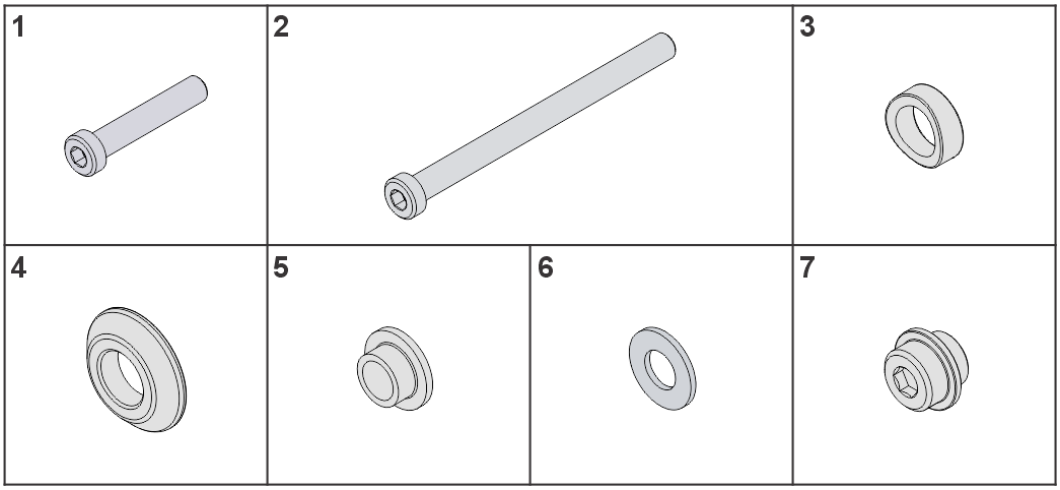

Item	Description	Qty.
1	M10 X 55mm Bolt	2
2	M10 X 130mm Bolt	2
3	Concave Spacer	2
4	1-1/4 OD x 1/4 Spacer	2
5	Pulley Retainer	2

Item	Description	Qty.
6	Washer: 3/8 X 0.81 X 0.06, FL, SS	2
7	Socket Nut	4

Rope Pull Hardware Kit

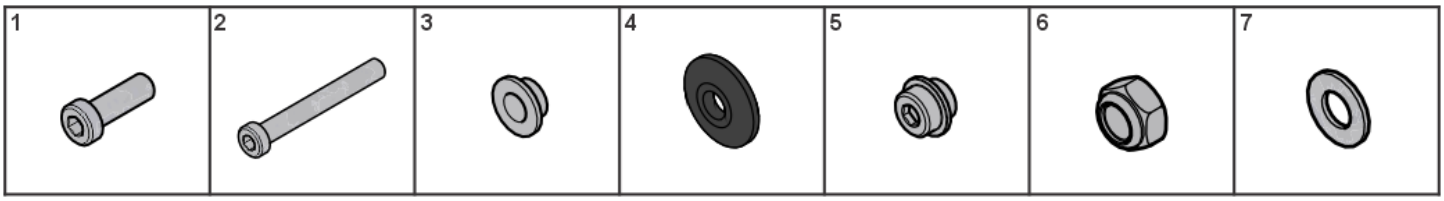

Item	Description	Qty.
1	M10 X 30mm Bolt	4
2	M10 X 80mm Bolt	2
3	Pulley Retainer	2
4	Backing Washer	4
5	Socket Nut	2
6	M10 Nut Hex Nylock	4
7	Washer: 3/8 X 0.81 X 0.06, FL, SS	8

Wall Ball Hardware Kit

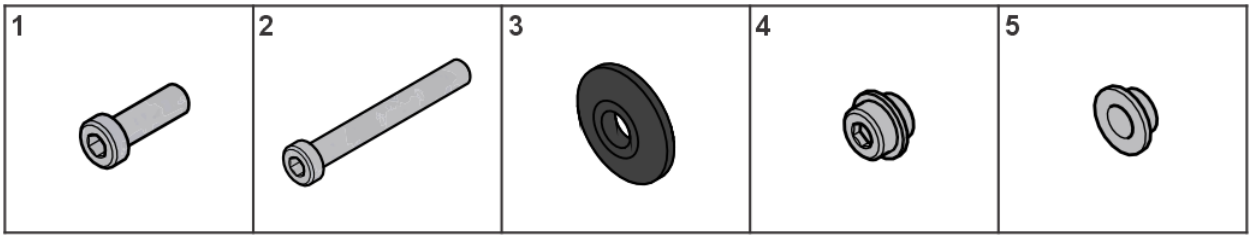

Item	Description	Qty.
1	M10 X 20mm Bolt	2
2	M10 X 80mm Bolt	2
3	Backing Washer	2
4	Socket Nut	2
5	Pulley Retainer	2

Install Frame Top Option

Install Frame Top Option (if equipped):

1. For All Frame Top Options, excluding the Barbell Training. See Barbell Training Installation, if equipped.
   Loosely install frame top option and hardware.

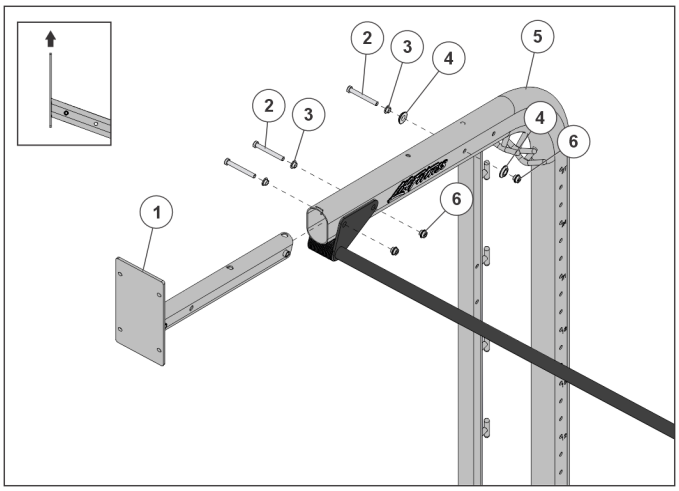

Item	Description	Qty.
1	Frame Top Option	1
2	M10 X 80mm Bolt	3
3	Pulley Retainer	3
4	Backing Washer	2
5	Socket Nut	2
6	Side Frame	1

2. For Heavy Bag Option (if equipped):
   Attach the boxing swivel and snap link to the eye bolt.

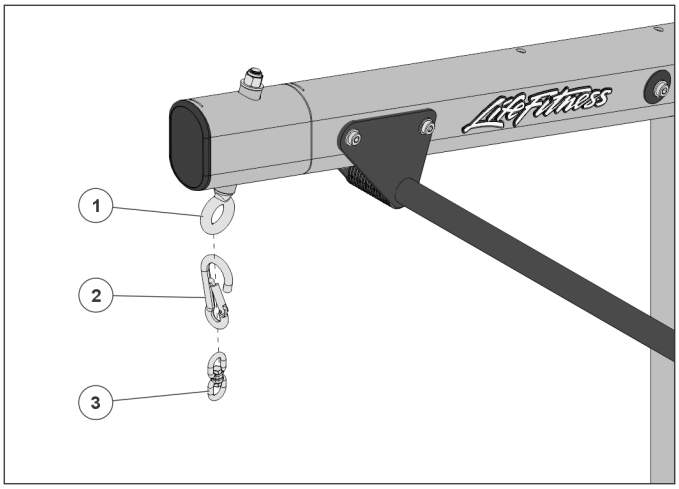

Item	Description	Qty.
1	Eye Bolt	1
2	3/8" Snap Link	1
3	Boxing Swivel	1

3. For Rope Pull Option (if equipped):
   Attach rope pull option with its hardware and tighten to **20-29 ft-lbs/27.1-39.3 Nm**.

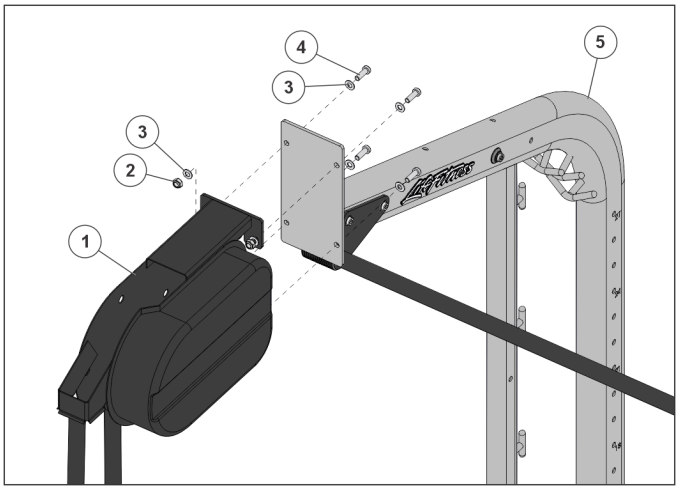

Item	Description	Qty.
1	Rope Pull Assembly	1
2	M10 Nut	4
3	Washer: 3/8 X 0.81 X 0.06, FL, SS	4
4	M10 X 30mm Bolt	4
5	Side Frame	1

4. For Wall Ball Option (if equipped):

Ask customer for height preference: low or high. Then attach panel to frame with hardware and tighten to **20-29 ft-lbs/27.1-39.3 Nm**.

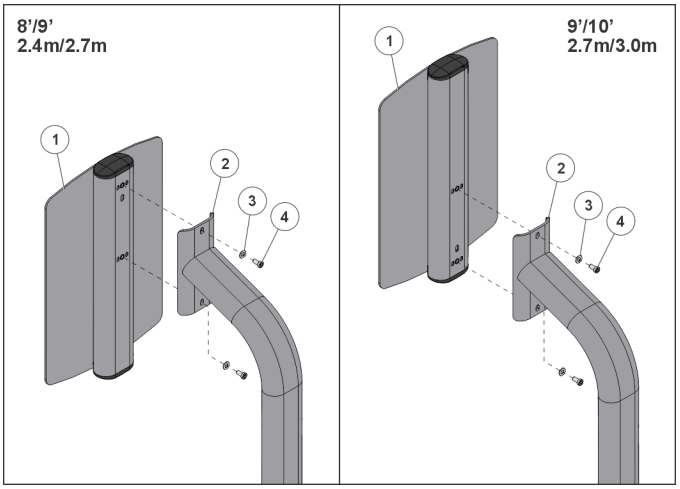

Item	Description	Qty.
1	Wall Ball Panel Weldment	1
2	Wall Ball Frame Weldment	1
3	Washer: 3/8 X 0.81 X 0.06, FL, SS	2
4	M10 X 20mm Bolt	2

Install Barbell Training Option

Install Barbell Training Option (if equipped):

1. Loosely install Olympic frame assembly to the functional side frame.

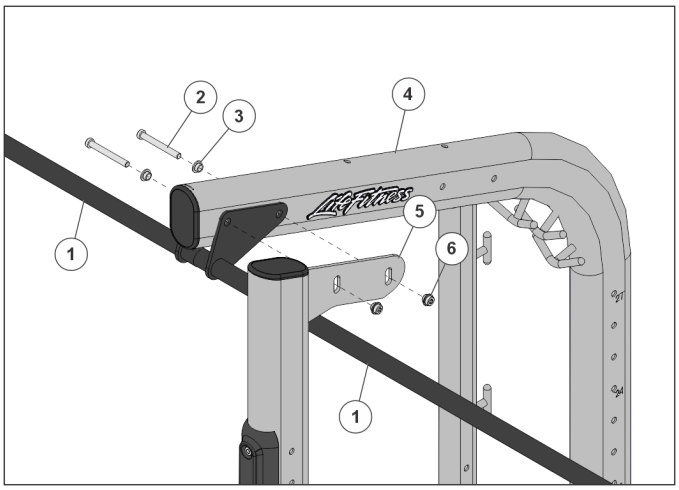

Item	Description	Qty.
1	Chin Option	2
2	M10 X 85mm Bolt	2
3	Pulley Retainer	2
4	Functional Side Frame	1
5	Olympic Frame Assembly	1
6	Socket Nut	2

NOTE: Chin option left of Item 5 could also be an end plate.

2. Carefully arrange the Olympic bottom weldments in their correct orientations; small tabs on the Olympic training side frames, large tabs (facing each other) on the functional side frames.

Isometric View

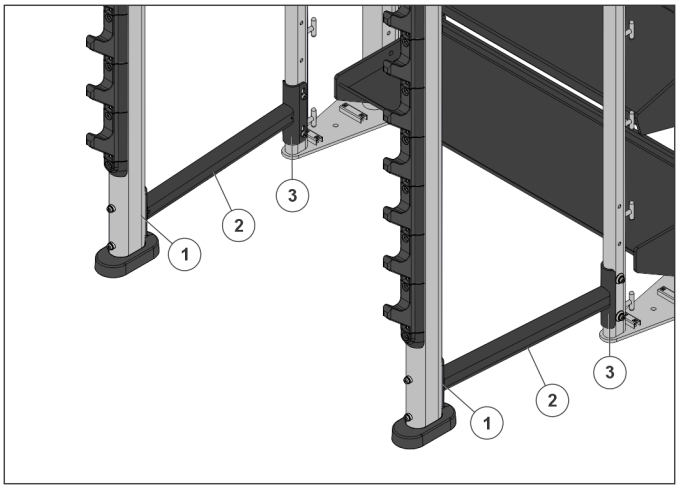

Top View

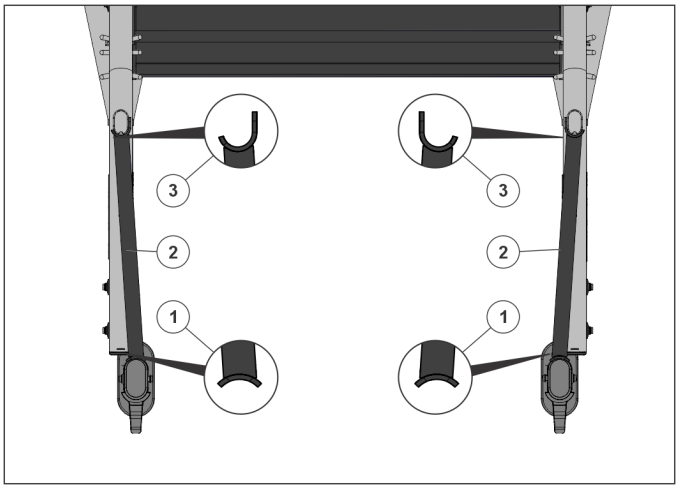

Item	Description	Qty.
1	Small Tab	2
2	Olympic Bottom Weldment	2
3	Large Tab	2

3. [Left side shown] Attach Olympic bottom weldment to the Olympic frame assembly and the functional side frame with its hardware and tighten to **20-29 ft-lbs/27.1-39.3 Nm**.

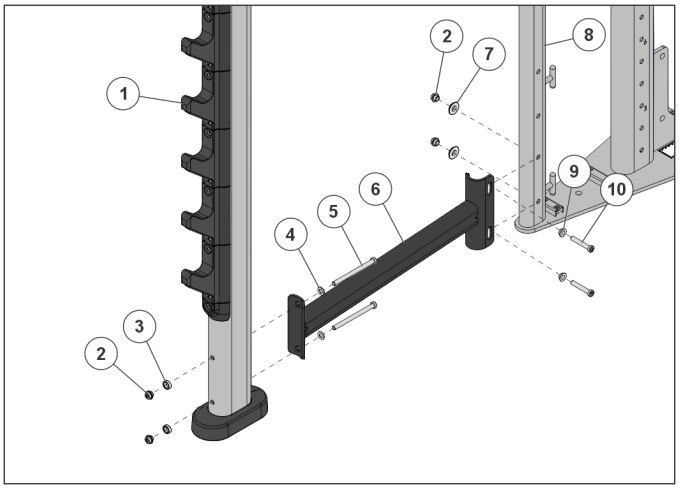

Item	Description	Qty.
1	Olympic Frame Assembly	1
2	Socket Nut	2
3	Concave Spacer	2
4	Washer: 3/8 X 0.81 X 0.06, FL, SS	2
5	M10 X 130mm Bolt	2
6	Olympic Bottom Weldment	1
7	Backing Washer	2
8	Functional Side Frame	1
9	Pulley Retainer	2
10	M10 X 60mm Bolt	2

4. Attach the Left and Right bar hangers to the Olympic frame assemblies, facing each other, with their hardware and tighten to **20-29 ft-lbs/27.1-39.3 Nm**.

Left Bar Hanger

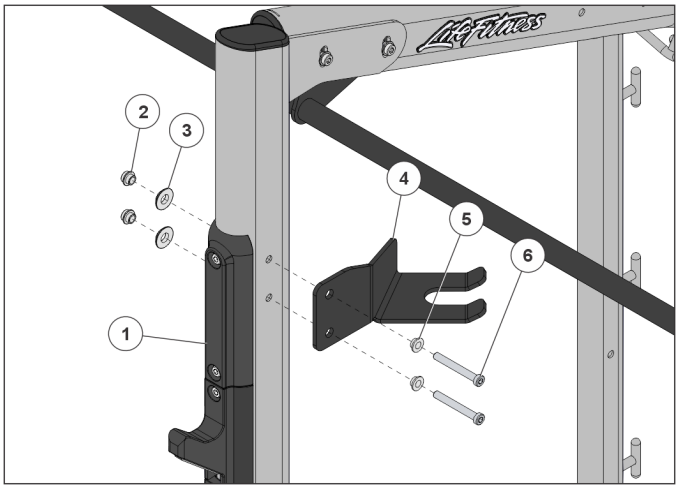

Right Bar Hanger

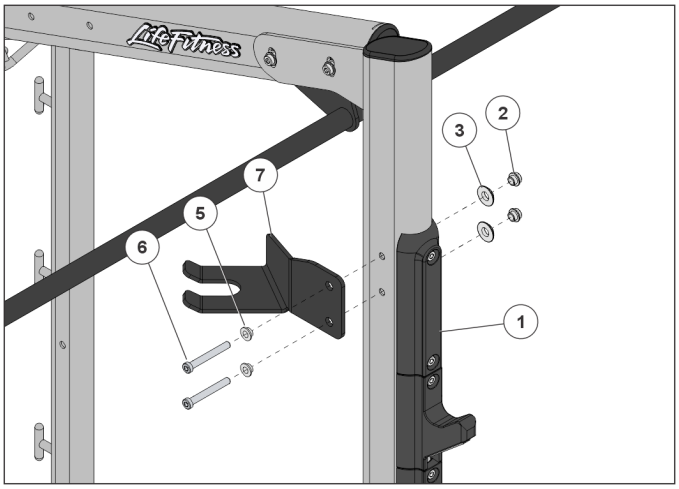

Item	Description	Qty.
1	Olympic Frame Assembly	2
2	Socket Nut	4
3	1-1/4 OD x 1/4 Spacer	4
4	Left Bar Hanger	1
5	Pulley Retainer	4
6	M10 X 80mm Bolt	4
7	Right Bar Hanger	1

11. Assembly: Frame Bottom

Frame Bottom Components

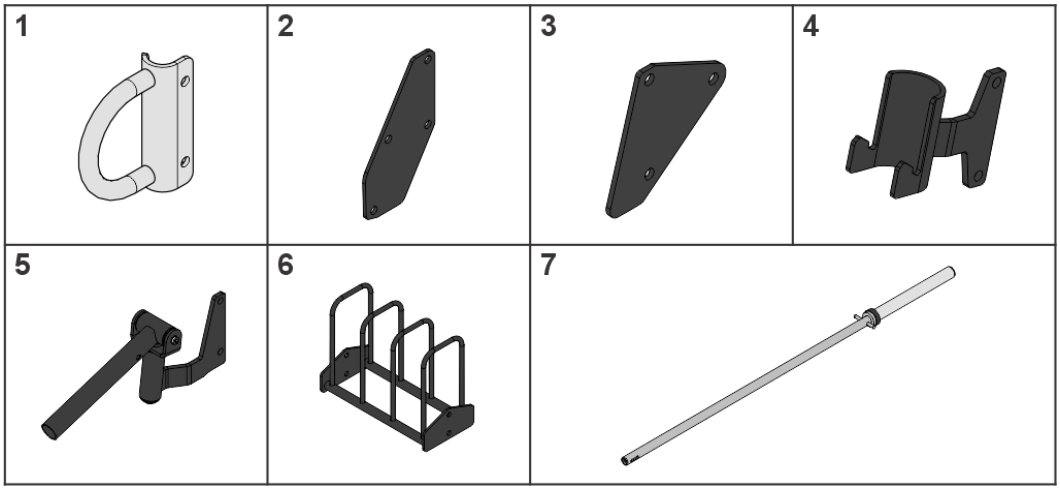

Item	Description
1	Battle Rope Anchor
2	Bar Holder Plate
3	Power Pivot Plate
4	Bar Holder
5	Power Pivot Assembly
6	Weight Plate Divider
7	Olympic Bar

Battle Rope Hardware Kit

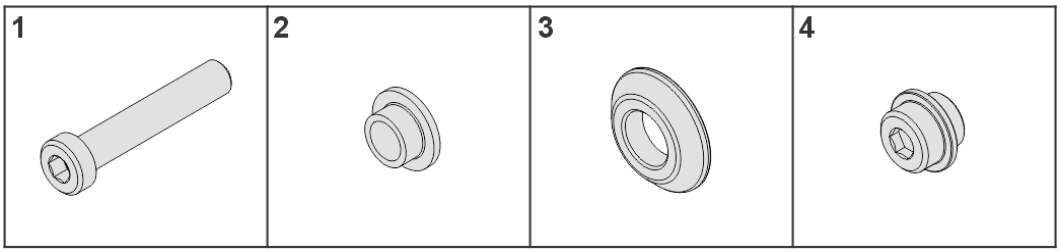

Item	Description	Qty.
1	M10 X 55mm Bolt	2
2	Pulley Retainer	2
3	1-1/4 OD x 1/4 Spacer	2
4	Socket Nut	2

Install Frame Bottom Option

Install Frame Bottom Option (if equipped):

For Battle Rope Option:

Attach the battle rope weldment to the side frame/extension leg with its hardware and tighten to **20-29 ft-lbs/ 27.1-39.3 Nm**.

Side Frame Assembly

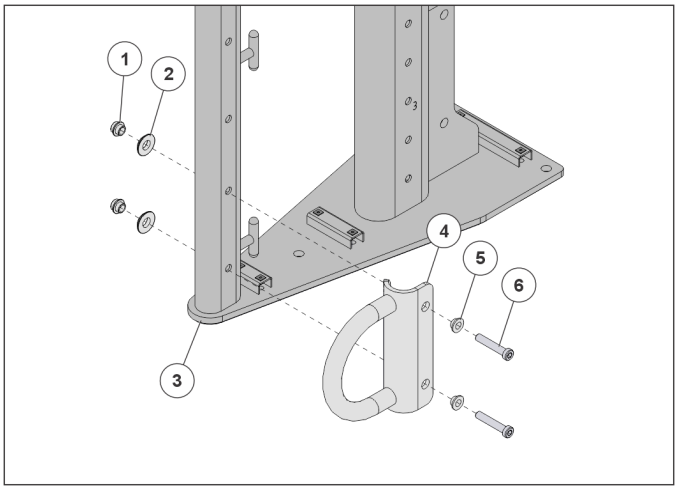

Extension Leg Assembly

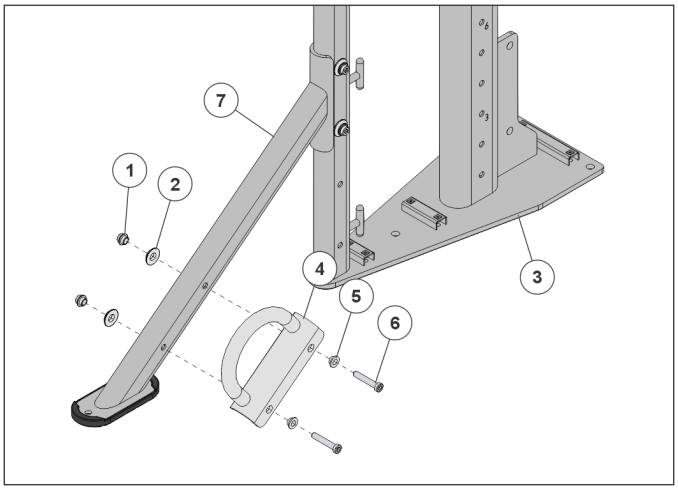

Item	Description	Qty.
1	Socket Nut	2
2	1-1/4 OD x 1/4 Spacer	2
3	Side Frame	1
4	Battle Rope Weldment	1
5	Pulley Retainer	2
6	M10 X 55mm Bolt	2
7	Extension Leg Assembly	1

Power Pivot Hardware Kit

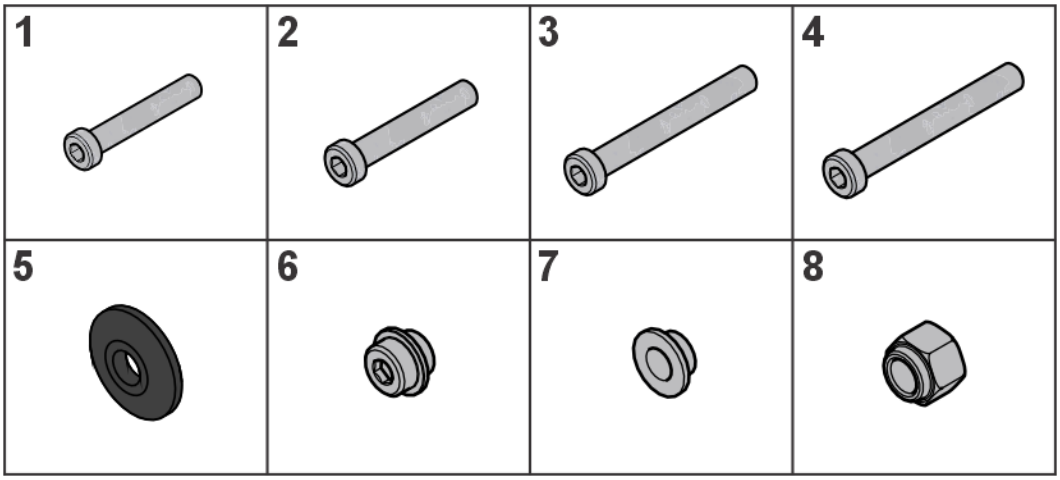

Item	Description	Qty.
1	M10 X 60mm Bolt	5
2	M10 X 80mm Bolt	2
3	M10 X 85mm Bolt	2

Item	Description	Qty.
4	M10 X 90mm Bolt	2
5	Backing Washer	7
6	Socket Nut	4
7	Pulley Retainer	4
8	M10 Nut, Hex Nylock	4

Power Pivot Divider Hardware Kit

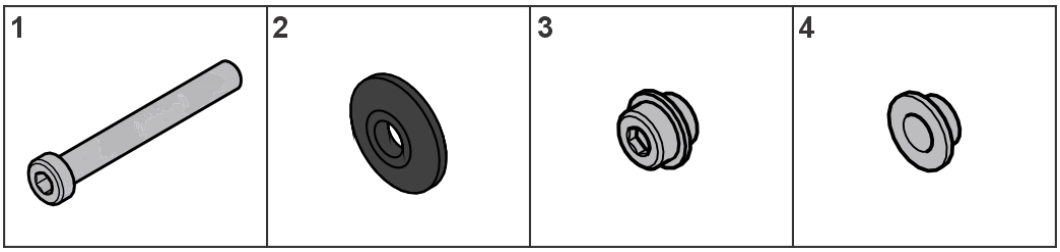

Item	Description	Qty.
1	M10 X 60mm Bolt	2
2	Backing Spacer	2
3	Socket Nut	2
4	Pulley Retainer	2

Install Power Pivot Option

Install Power Pivot Option (if equipped):

1. For Extension Leg Use:
   Attach the plates to the side frame and extension leg with its hardware and tighten to **20-29 ft-lbs/27.1-39.3 Nm**.

Bar Holder Plate Assembly

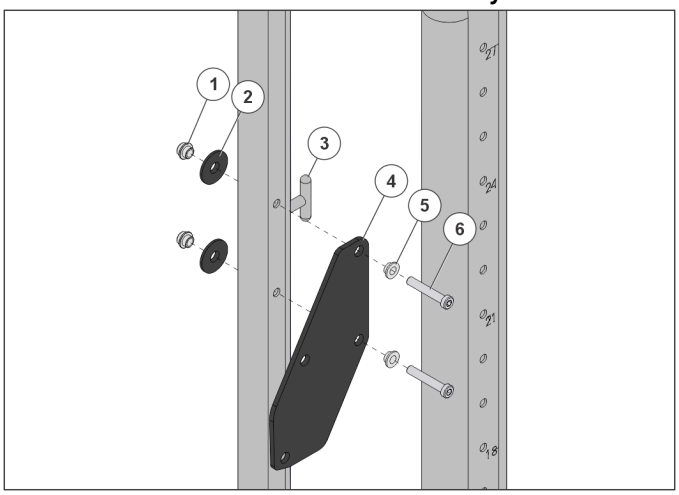

Power Pivot Plate Assembly

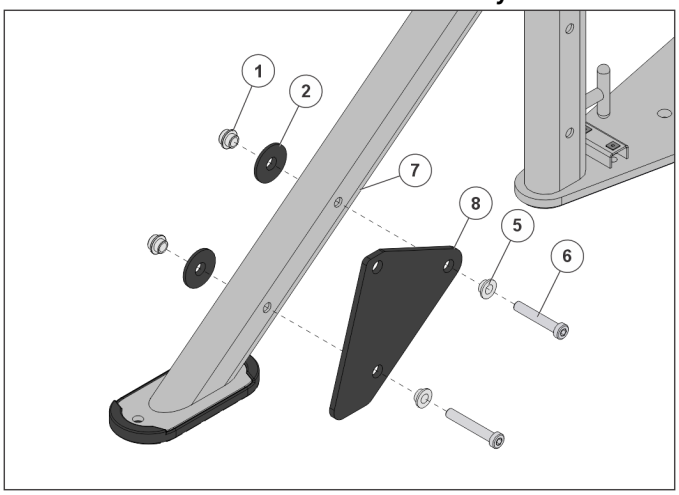

Item	Description	Qty.
1	Socket Nut	2
2	Backing Washer	2
3	Side Frame	1
4	Bar Holder Plate	1
5	Pulley Retainer	2
6	M10 X 80mm Bolt	2
7	Extension Leg	1
8	Power Pivot Plate	1

2. Attach the power pivot assembly to the side frame or power pivot plate with its hardware and tighten to **20-29 ft-lbs/27.1-39.3 Nm**.

Side Frame Assembly

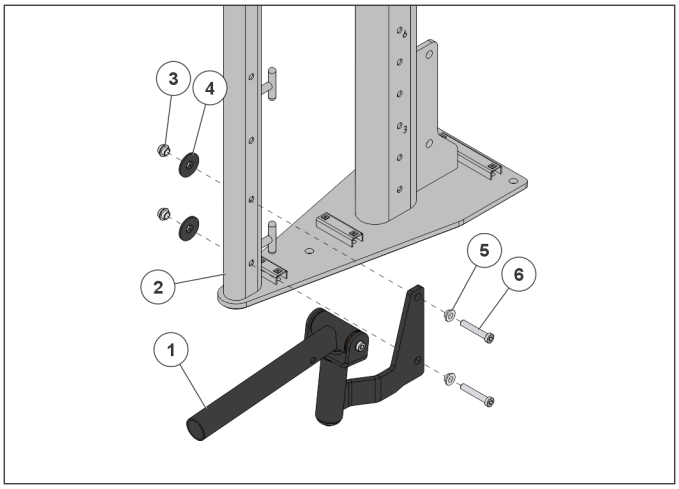

Extension Leg Assembly

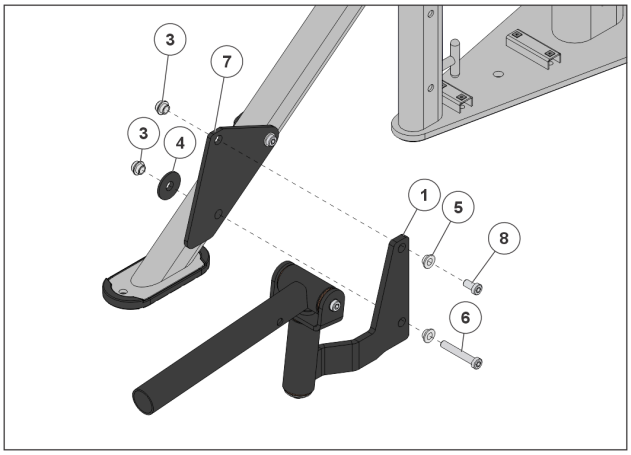

Item	Description	Qty.
1	Power Pivot Assembly	1
2	Side Frame	1
3	Socket Nut	2
4	Backing Washer	1/2
5	Pulley Retainer	2
6	M10 X 80mm Bolt	1/2
7	Power Pivot Plate	1
8	M10 X 20mm Bolt	1

3. Attach the Olympic bar holder to the side frame/plate with its hardware and tighten to **20-29 ft-lbs/27.1-39.3 Nm**

Side Frame Assembly

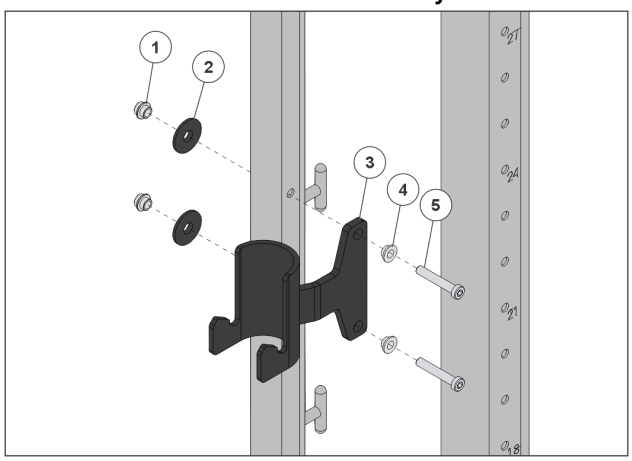

Extension Leg Assembly

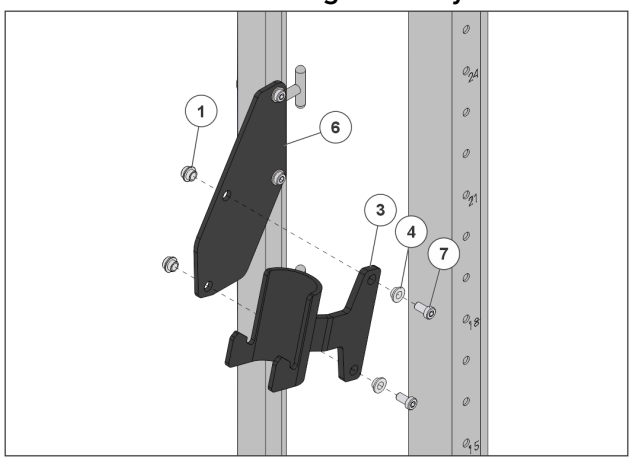

Item	Description	Qty.
1	Socket Nut	2
2	Backing Washer	2/0
3	Bar Holder	1
4	Pulley Retainer	2
5	M10 X 80mm Bolt	2/0
6	Bar Holder Plate	1
7	M10 X 20mm Bolt	0/2

4. Attach the weight plate divider to the side frame, with or without a shelf, and its hardware, being sure to add an additional backing washer if a shelf is used. Tighten to**20-29 ft-lbs/27.1-39.3 Nm**.

Side Frame Assembly

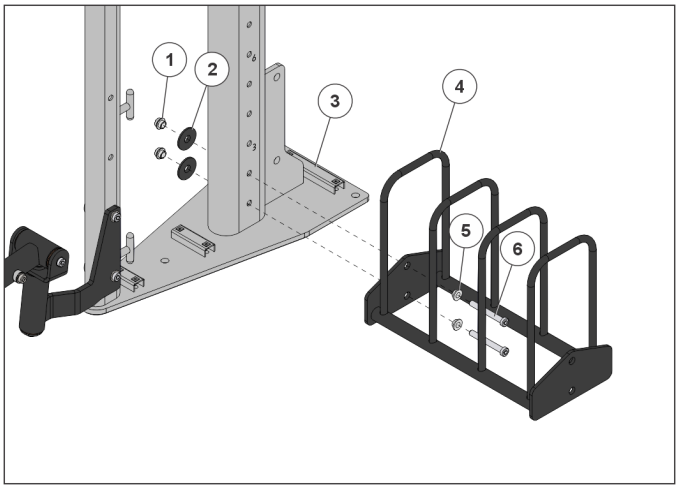

Extension Leg Assembly

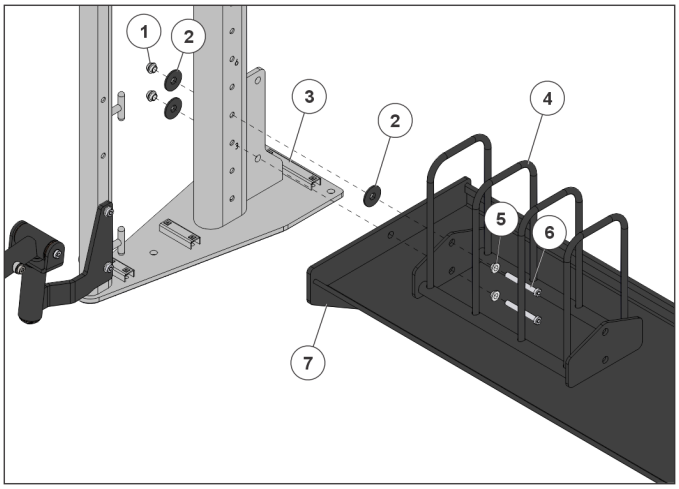

Item	Description	Qty.
1	Socket Nut	2
2	Backing Washer	2/3
3	Side Frame	1
4	Weight Plate Divider	1
5	Pulley Retainer	2
6	M10 X 80mm Bolt	2
7	Shelf Option	1

5. Attach the Olympic bar to the power pivot assembly with its hardware and tighten to **20-29 ft-lbs/27.1-39.3 Nm**.

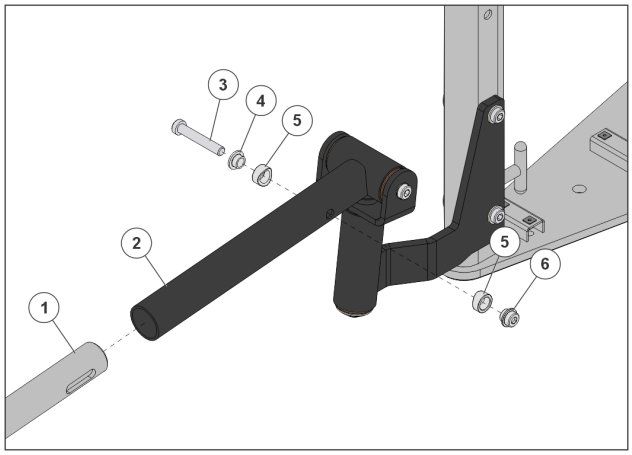

Item	Description	Qty.
1	M10 X 60mm Bolt	1
2	Pulley Retainer	1
3	Concave Spacer	2
4	Olympic Bar	1
5	Socket Nut	1
6	Power Pivot Assembly	1

12. Assembly: Side Storage

Side Storage Installation Information

For Accessory Side Storage:

The accessory side storage can pivot fifteen degrees to the left, sit level or 15 degrees to the right, by using the different lower bolt holes. Check with customer for preference.

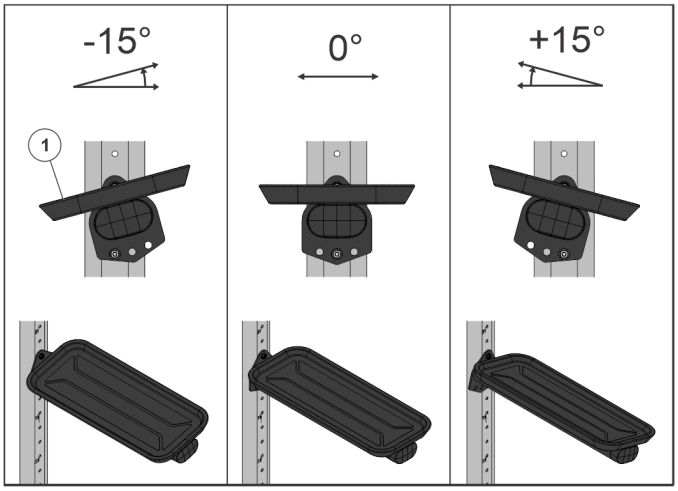

Item	Description	Qty.
1	Accessory Side Storage	1

For Bosu® Ball Storage:

Bosu ball storage are side specific and can only be installed on its designated side of an side frame, orientating them so they face towards the front (chin).

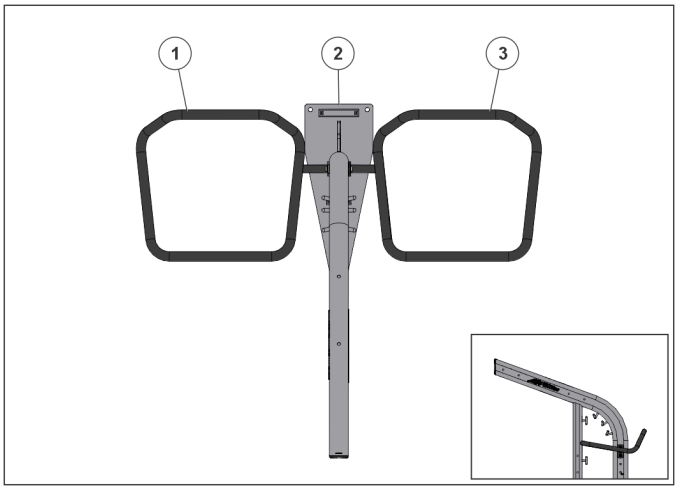

Item	Description	Qty.
1	Bosu Ball Storage, Left	1
2	Side Frame	1
3	Bosu Ball Storage, Right	1

For Bosu® Ball Storage:

Space the Bosu ball storage to accommodate different heights. This example spaces four assemblies at side frame holes 1-2, 9-10, 17-18 and 26-27. Check with customer for preference.

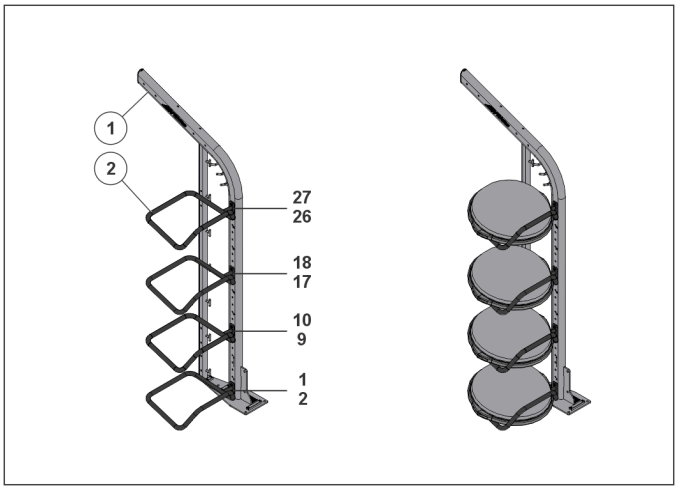

Item	Description	Qty.
1	Side Frame	1
2	Bosu Ball Storage	4

For Stability Ball Storage:

Stability ball storage can be installed on either the left or right side of an side frame by orientating them so they face towards the front (chin).

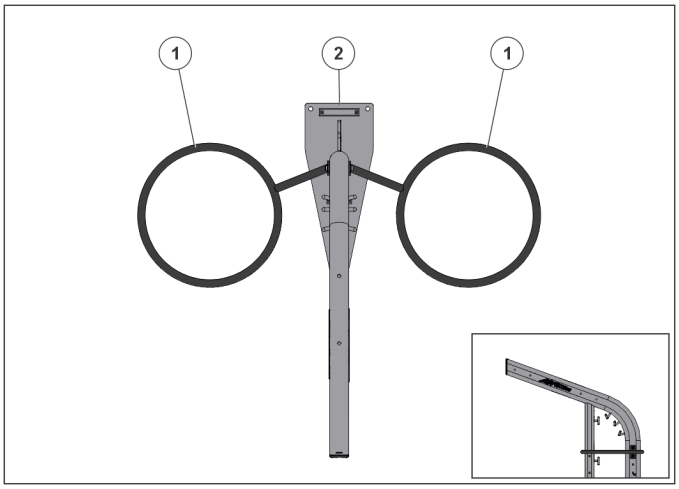

Item	Description	Qty.
1	Stability Ball Storage	2
2	Side Frame	1

For Stability Ball Storage:

Space the stability ball storage to accommodate different size exercise balls. This example spaces them at side frame holes 1-2, 14-15 and 26-27. Check with customer for preference.

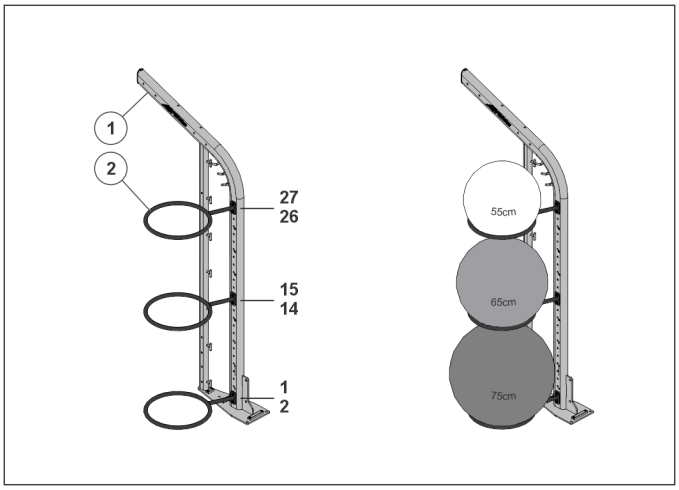

Item	Description	Qty.
1	Side Frame	1
2	Stability Ball Storage	3

80mm Hardware Kit

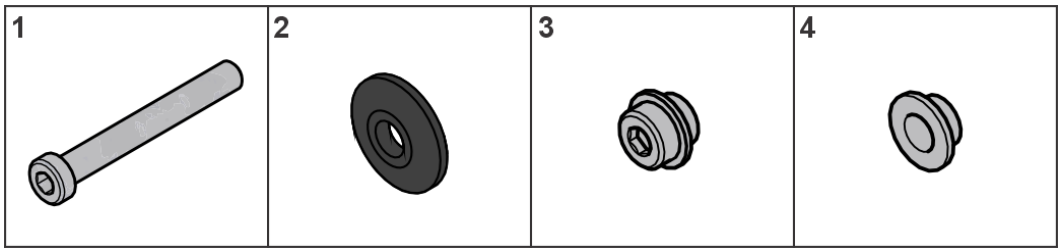

Item	Description	Qty.
1	M10 X 80mm Bolt	2
2	Backing Spacer	2
3	Socket Nut	2
4	Pulley Retainer	2

Side Dumbbell Hardware Kit

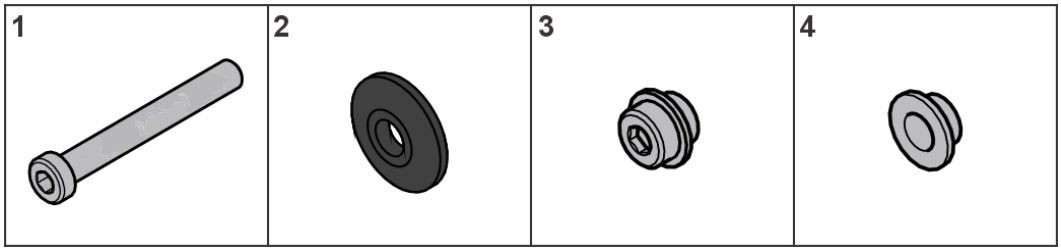

Item	Description	Qty.
1	M10 X 85mm Bolt	3
2	Backing Spacer	3
3	Socket Nut	6
4	Pulley Retainer	3

Side Foam Storage Hardware Kit

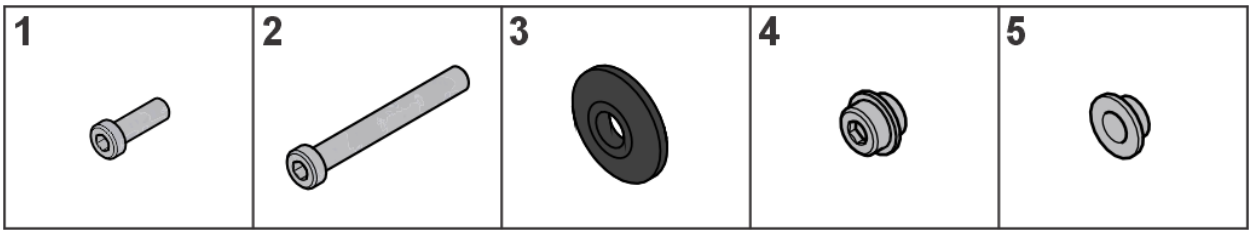

Item	Description	Qty.
1	M10 X 20mm Bolt	2
2	M10 X 85mm Bolt	2
3	Backing Washer	2
4	Socket Nut	4
5	Pulley Retainer	4

Install Side Storage Option

Install Side Storage Option (if equipped):

1. For all side storage options, excluding Weight Horns and Olympic Rack Storage.

- See Step 2 for Weight Horn Assembly
- See Step 3 for Olympic Rack Storage Assembly

Loosely install side option and hardware.

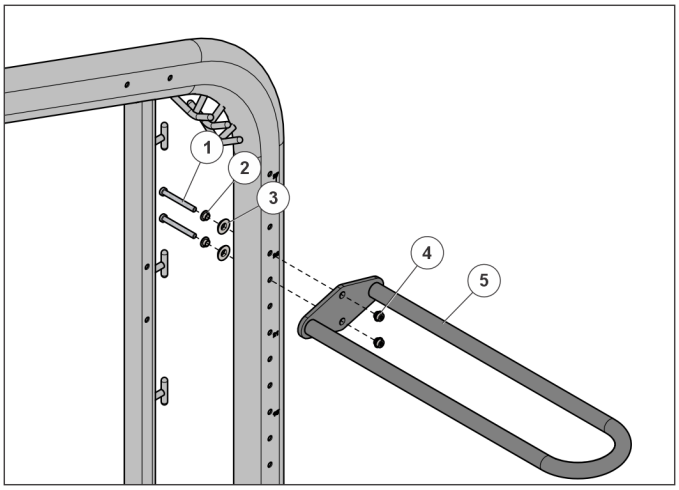

Item	Description	Qty.
1	M10 X 80mm Bolt	2
2	Pulley Retainer	2
3	Backing Washer	2
4	Socket Nut	2
5	Side Option (dual rail shown)	1

2. For Foam Roller option:
Orientate bracket on the foam roller weldment based on Left or Right placement.

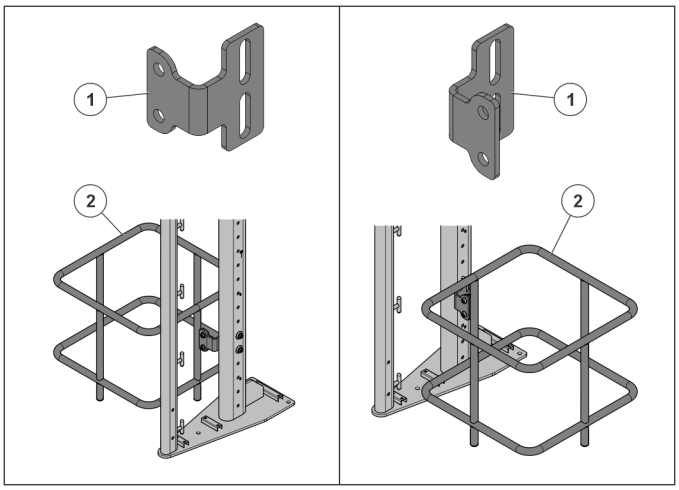

Item	Description	Qty.
1	Foam Roller Bracket	1
2	Foam Roller Weldment	1

3. For Weight Horn option:
Attach weight horn assembly to side frame and fasten hardware to **20-29 ft-lbs/27.1-39.3 Nm**.

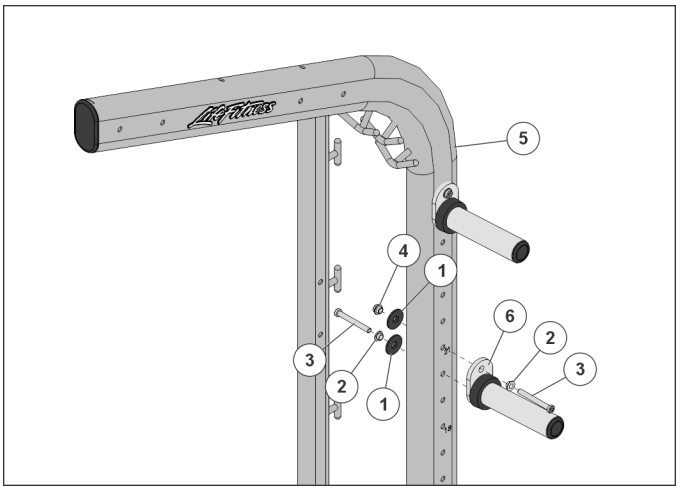

Item	Description	Qty.
1	Backing Washer	2
2	Pulley Retainer	2
3	M10 X 85mm Bolt	2
4	Socket Nut	1
5	Functional Side Frame	1
6	Weight Horn Assembly	1

NOTE: Deduct backing washers if shelf on other side of weight horn assembly.

4. For Olympic Rack Storage option:
Install the Olympic rack assembly to the side frame with its hardware and tighten to **20-29 ft-lbs/27.1-39.3 Nm**.

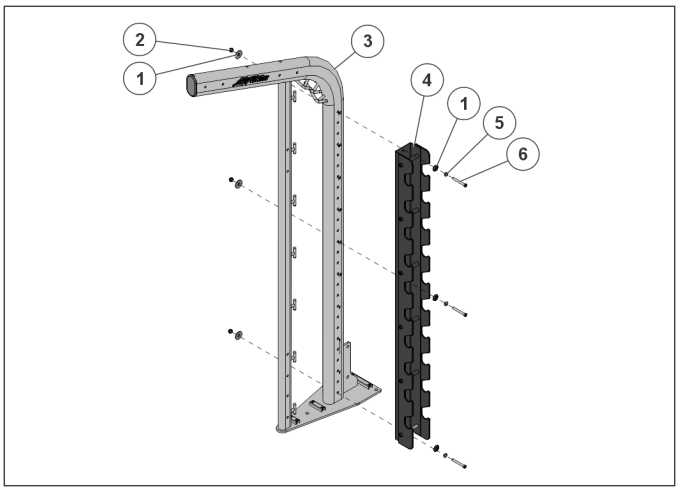

Item	Description	Qty.
1	Backing Washer	6
2	Socket Nut	3
3	Side Frame	1
4	Olympic Rack Assembly	1
5	Pulley Retainer	3
6	M10 X 80mm Bolt	3

5. For Mat Holder:
Insert pegs and adjust width as needed. **Tighten hardware to 40-50 in-lbs (4.5-5.6 Nm).**

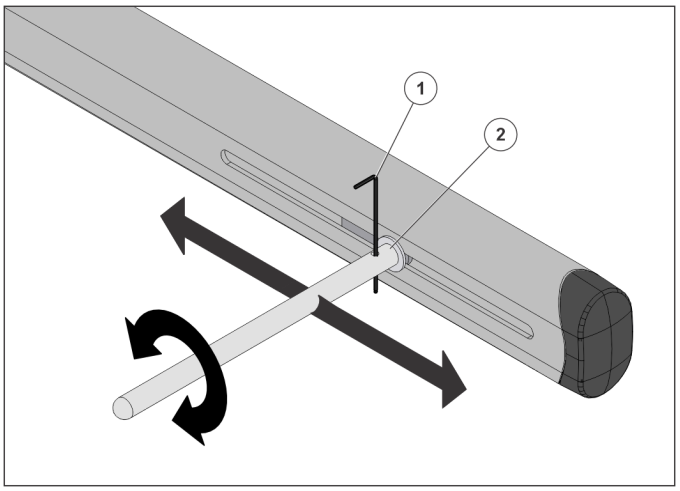

Item	Description	Qty.
1	3mm Hex Wrench	1
2	Mat Holder Peg	1

13. Assembly: Final

Final Assembly

Follow these steps to complete assembly.

1. Tighten all hardware from previous assembly steps:
   - Tighten M8 hardware to **16-20 in-lbs/1.8-2.2Nm**.
   - Tighten M10 hardware to **20-29 ft-lbs/27.1-39.3Nm**.

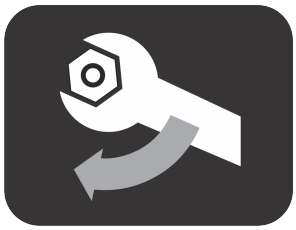

2. Prepare Cable Side Frame for Anchoring (if needed):

   Remove hardware from base of column and loosen its top hardware. Lift and move column to the side so a drill can access the front mount hole. Once anchored, replace column and hardware. Then tighten both top and base hardware to **20-29 ft-lbs/27.1-39.3Nm**.

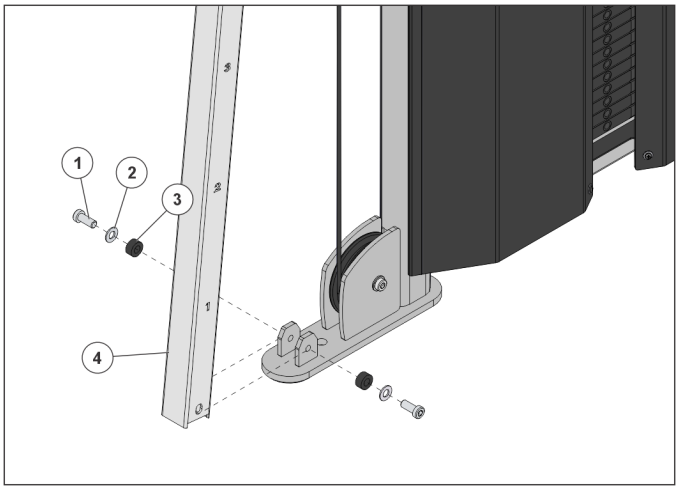

Item	Description	Qty.
1	M10 X 25mm Bolt	2
2	Washer: 3/8 X 0.81 X 0.06, FL, SS	2
3	Nylon Spacer	2
4	Cable Column	1

3. Anchor unit to floor (if needed):

   Refer to Bolt to Floor Guide in this manual for further details. SYNRGY units using the Freestanding System do not need to be anchored directly to the floor.

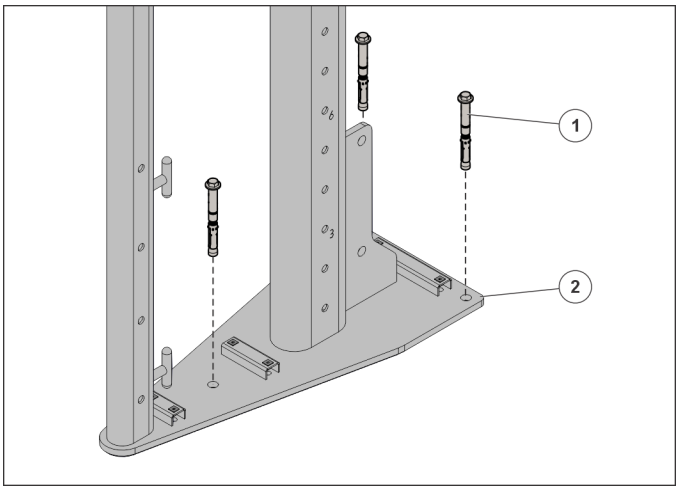

Item	Description	Qty.
1	Floor Anchor	3
2	Side Frame	1

4. Attach Foot Covers:
Snap front of covers together and wrap around side frame.

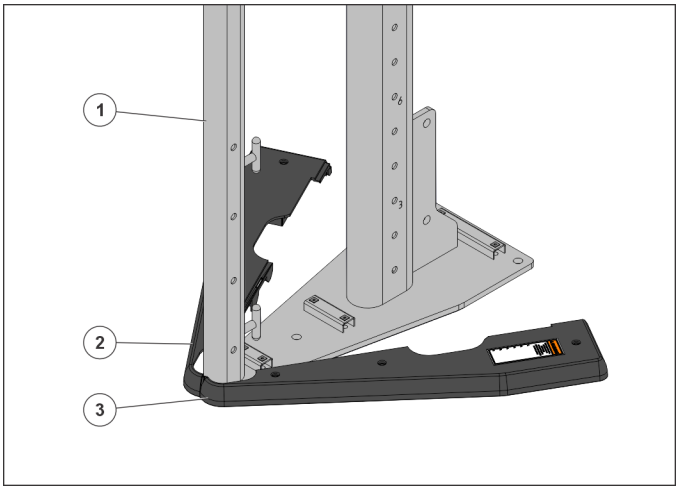

Item	Description	Qty.
1	Side Frame	1
2	Left Foot Cover	1
3	Right Foot Cover	1

5. Attach Foot Covers:
Install hardware and tighten to **16-20 in-lbs/ 1.8-2.2 Nm**.

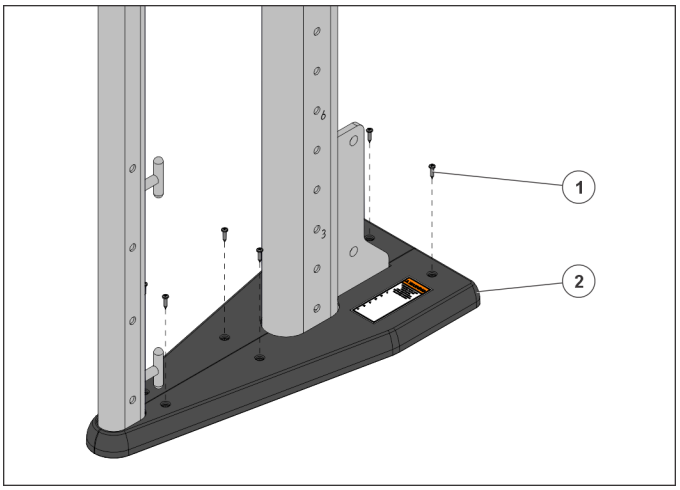

Item	Description	Qty.
1	8 X 3/4" Screw	6
2	Left Foot Cover	1
3	Right Foot Cover	1

6. Attach Hole Plugs (where applicable):
Fill empty bolt holes with hole plugs; tap flush into frame.

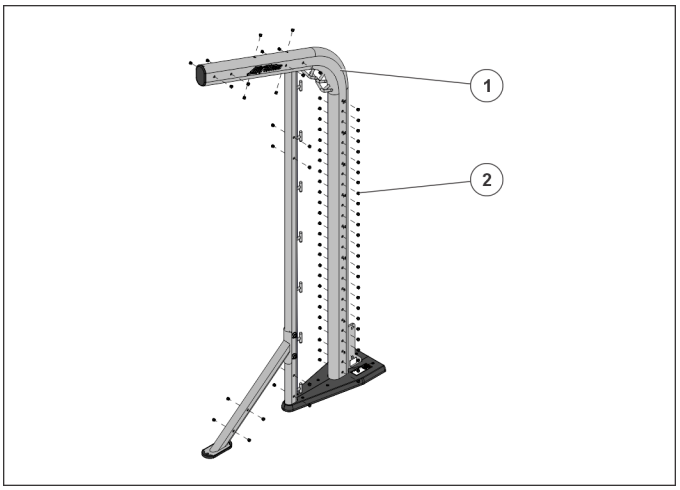

Item	Description	Qty.
1	Side Frame	1
2	9/16" Hole Plug	58

14. Product Information

Specifications

Weights and Dimensions: Chins

Item	Weight		Dimensions D x W x H	
	lbs	kg	in	cm
Ball Grip - 4 foot	22	10	15 x 49 x 5	38 x 124.5 x 13
Ball Grip - 6 foot	28	12.5	15 x 75 x 5	38 x 190.5 x 13
Multi Grip - 4 foot	22	10	17 x 49 x 5	43 x 124.5 x 13
Multi Grip - 6 foot	29	13	17 x 75 x 5	43 x 190.5 x 13
Straight Grip - 4 foot	9	4	7 x 49 x 5	18 x 124.5 x 13
Straight Grip - 6 foot	29.5	13.5	7 x 75 x 5	18 x 190.5 x 13

Weights and Dimensions: Frame Bottom

Item	Weight		Dimensions D x W x H	
	lbs	kg	in	cm
Battle Rope Anchor	5	2.5	7 x 2 x 8	18 x 5 x 20.5
Power Pivot (Bar and Pivot)	35	16	8.5 x 4.5 x 80	21.5 x 11.5 x 203
Power Pivot (Weight Plate Storage)	13	6	8 x 16.5 x 12.5	20.5 x 42 x 32

Weights and Dimensions: Frame Top

Item	Weight		Dimensions D x W x H	
	lbs	kg	in	cm
Heavy Bag Anchor	13	6	34 x 2.5 x 8.5	86.5 x 6.5 x 21.5
Rope Pull	55	25	8 x 45 x 18.5	20.5 x 114.5 x 47
Wall Ball Target	43	19.5	31.5 x 16 x 50	80 x 40.5 x 127

Weights and Dimensions: Monkey Bars

Item	Weight		Dimensions D x W x H	
	lbs	kg	in	cm
Add - 4 foot	109	49.5	119 x 49 x 16	302 x 125.5 x 40
Add - 6 foot	135	61	119 x 75 x 16	302 x 190.5 x 40
Core - 4 foot	165	75	119 x 52 x 16	43 x 132 x 40
Core - 6 foot	191	87	119 x 78 x 16	43 x 198 x 40

Weights and Dimensions: Shelves

Item	Weight		Dimensions D x W x H	
	lbs	kg	in	cm
Accessory Dumbbell - 4 foot	42	19	17 x 46.5 x 6.5	43 x 118 x 16.5
Accessory Dumbbell - 6 foot	91	42	17 x 72.5 x 6.5	43 x 184 x 16.5

Item	Weight		Dimensions D x W x H	
	lbs	kg	in	cm
Dual Rail - 4 foot	15.5	7	9.5 x 46.5 x 4	24 x 118 x 10
Dual Rail - 6 foot	22	10	9.5 x 72.5 x 4	24 x 184 x 10
Stability Ball Storage - 4 foot	14	6.5	21.5 x 46.5 x 7	54.5 x 118 x 18
Stability Ball Storage - 6 foot	18	8	21.5 x 72.5 x 7	54.5 x 184 x 15
Weight Plate Storage - 4 foot	29	13	10 x 46.5 x 6	25.5 x 118 x 15
Weight Plate Storage - 6 foot	42	19	10 x 72.5 x 6	25.5 x 184 x 15

Weights and Dimensions: Side Frames

Item	Weight		Dimensions D x W x H	
	lbs	kg	in	cm
Cable	642.5	291.5	60 x 10 x 94.5	152.5 x 25.4 x 240
Functional	88.5	40	47 x 10 x 95	119.5 x 25.5 x 241.5

Weights and Dimensions: Side Storage

Item	Weight		Dimensions D x W x H	
	lbs	kg	in	cm
Accessory Storage	38	17.5	30 x 13 x 7	76.5 x 33 x 18
BOSU® (Left/Right)	10	4.5	20 x 26 x 9	50 x 66 x 23
Dual Rail	11	5	9.5 x 30.5 x 4	24 x 77.5 x 10
Foam Roller Storage	22	10	21 x 22 x 17	53.5 x 54 x 43
Mat Storage	8	3.5	6.5 x 26.5 x 6.5	16.5 x 67.5 x 16.5
Olympic Rack	26	12	67 x 5.5 x 5	170.25 x 14 x 13
Stability Ball	6	3	19 x 25.5 x 4	48 x 65 x 10
Weight Plate	3	1.5	8.75 x 2.5 x 4	22.25 x 6.5 x 10

Weights and Dimensions: Stability

Item	Weight		Dimensions D x W x H	
	lbs	kg	in	cm
Back-to-Back - 4 foot	273	124	11 x 49 x 17	28 x 124.5 x 43
Back-to-Back - 6 foot	289	131	11 x 75 x 17	28 x 190.5 x 43
Extension Leg	9	4	24.5 x 3 x 19	62.5 x 7.75 x 48.25
Freestanding System - 4 foot	271	123	11 x 49 x 11	28 x 124.5 x 28
Freestanding System - 6 foot	287	130	11 x 75 x 11	28 x 190.5 x 28

Footprint and Live Area

Top View

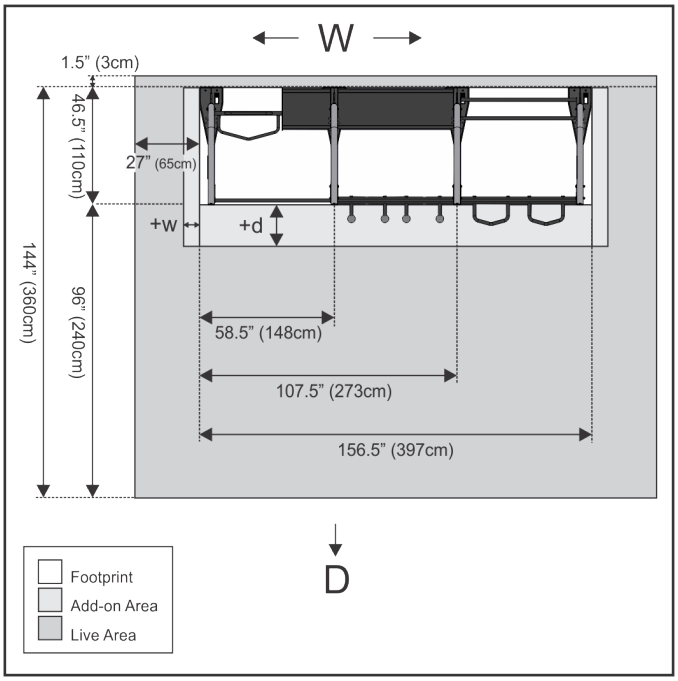

Side View

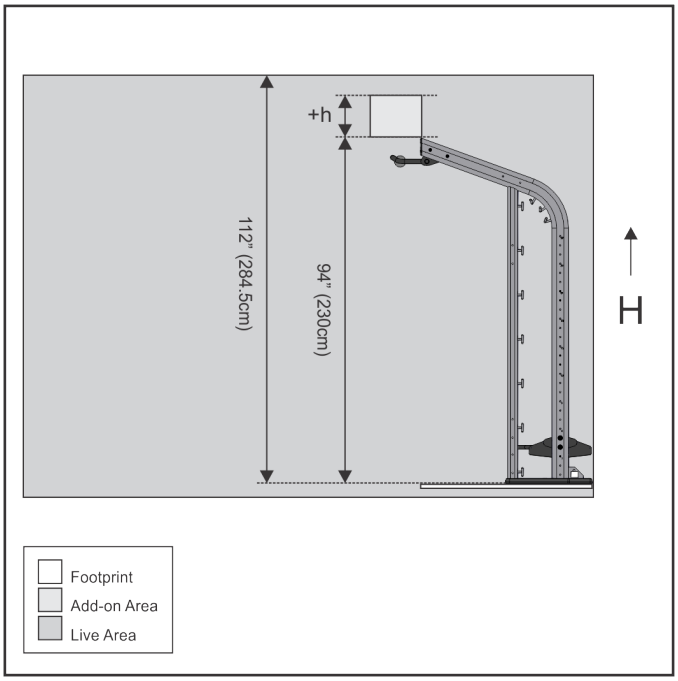

Top View (with Monkey Bars)

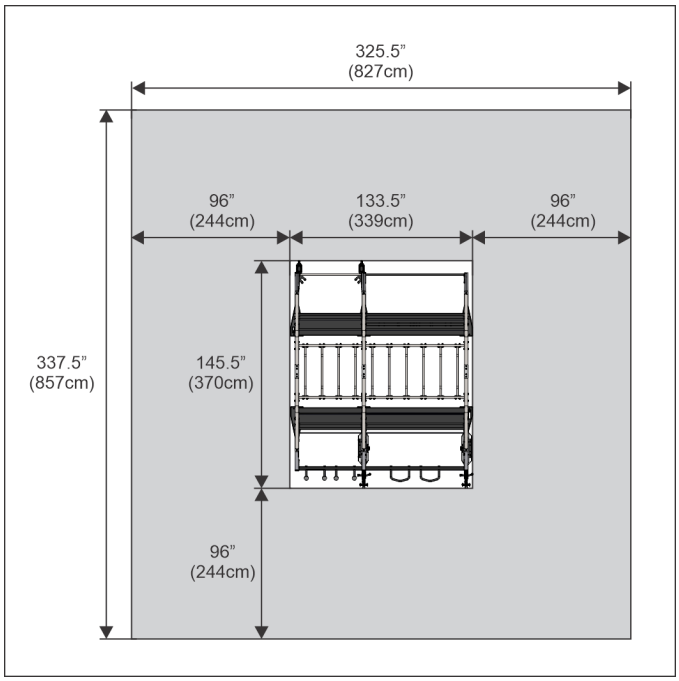

Item	Footprint			Live Area		
	d	w	h	D	W	H
Frame Bottom						
Battle Rope Anchor	N/A	N/A	N/A	+ 96" (244cm)	+ 96" (244cm)	N/A
Power Pivot	N/A	N/A	N/A	+ 96" (244cm)	+ 96" (244cm)	N/A
Frame Top						
Barbell Training	+ 8.5" (21.5cm)	N/A	+ 2" (5cm)	+ 48 " (122cm)	+ 36 " (91.5cm)	N/A

Item	Footprint			Live Area		
	d	w	h	D	W	H
Heavy Bag Anchor	+ 6.5" (16.5cm)	N/A	+ 3" (7.5cm)	N/A	N/A	N/A
Rope Pull	+ 20.5" (52cm)	N/A	+ 6" (15cm)	N/A	N/A	N/A
Wall Ball Target ∧	+ 7.5" (19cm)	+ 3" (7.5cm)	+ 38 " (97cm)	N/A	N/A	+ 62" (97cm)
Wall Ball Target ∨	+ 7.5" (19cm)	+ 3" (7.5cm)	+ 26" (66cm)	N/A	N/A	+ 50" (127cm)
Monkey Bars						
Add - 4 foot	N/A	+ 48 " (122cm)	+ 6" (15cm)	+ 52 " (132cm)	N/A	N/A
Add - 6 foot	N/A	+ 72 " (183cm)	+ 6" (15cm)	+ 52 " (132cm)	N/A	N/A
Core - 4 foot	N/A	+ 48 " (122cm)	+ 6" (15cm)	+ 52 " (132cm)	N/A	N/A
Core - 6 foot	N/A	+ 72 " (183cm)	+ 6" (15cm)	+ 52 " (132cm)	N/A	N/A
Side Storage						
Accessory Shelf	N/A	+ 30" (76cm)	N/A	N/A	N/A	+ 20" (51cm)
BOSU® Ball (L/R)	N/A	+ 25.5" (65cm)	N/A	N/A	N/A	+ 20" (51cm)
Dual Rail	N/A	+ 30" (76cm)	N/A	N/A	N/A	N/A
Foam Roller	N/A	+ 23" (58.5cm)	N/A	N/A	N/A	+ 48 " (122cm)
Mat Storage	N/A	+ 26" (67cm)	N/A	N/A	N/A	+ 52 " (132cm)
Olympic Rack	N/A	+ 5.5" (14cm)	N/A	N/A	N/A	+ 12" (30.5cm)
Stability Ball	N/A	+ 25" (63cm)	N/A	N/A	N/A	+ 30" (76cm)
Weight Plate Storage	N/A	+ 6" (15cm)	N/A	N/A	+ 12" (30.5cm)	+ 12" (30.5cm)
Stability						
Back-to-Back - 4 foot	+ 12" (30.5cm)	+ 48 " (122cm)	N/A	N/A	N/A	N/A
Back-to-Back - 6 foot	+ 12" (30.5cm)	+ 72 " (183cm)	N/A	N/A	N/A	N/A
Extension Leg	+ 25" (63cm)	N/A	N/A	N/A	N/A	N/A
Freestanding System - 4 foot	+ 4" (10cm)	+ 48 " (122cm)	N/A	N/A	N/A	N/A
Freestanding System - 6 foot	+ 4" (10cm)	+ 72 " (183cm)	N/A	N/A	N/A	N/A

NOTE: Some options increase Footprint and Live Area

15. Maintenance Procedures

Maintenance Schedule

IMPORTANT: Verify labels/decals are in place every month as part of regular maintenance. See Label Locations topic for more information.

ACTION	WEEKLY	MONTHLY	AS NEEDED
WAX			
Frames			•
INSPECT			
Frame	•		
Hardware	•		
Labels/Decals		•	
Paint		•	

Wax

- Frames with a standard, non-abrasive, wax finish.

Inspect

- Hardware. Check for loosening. Tighten as required.
- Frames. Inspect for wear and damage.
- For paint chips. Fill in immediately with manufacturers touch-up paint.

Once a Week

- Visually inspect all hardware for loosening, tampering or wear.

Once a Month

- Inspect hardware on all machines and tighten any bolts or nuts that may have loosened over the life of the product.

Notes

- Use polishing compound (such as car wax) and remove shoe scuffs from powder coated surfaces as necessary.

Approved and Compatible Cleaners

Two preferred cleaners have been approved by reliability experts: PureGreen 24 and Gym Wipes. Both cleaners will safely and effectively remove dirt, grime and sweat from equipment. PureGreen 24 and the Antibacterial Force formula of Gym Wipes are both disinfectants that are effective against MRSA and H1N1.

PureGreen 24 is available in a spray which is convenient to use. Apply the spray to a microfiber cloth and wipe down the equipment. Use PureGreen 24 on the equipment for at least 2 minutes for general disinfection purposes and at least 10 minutes for fungus and viral control.

Gym Wipes are large, durable pre-moistened wipes to use on the equipment before and after workouts. Use Gym Wipes on the equipment for at least 2 minutes for general disinfection purposes.

Contact Customer Support Services to order these cleaners (1-800-351-3737 or email: customersupport@lifefitness.com).

Mild soap and water or a mild non-abrasive household cleaner can also be used to clean the display and all exterior surfaces. Use a soft microfiber cloth only. Apply the cleaner to the microfiber cloth before cleaning. DO NOT use ammonia or acid based cleaners. DO NOT use abrasive cleaners. DO NOT use paper towels. DO NOT apply cleaners directly to the equipment surfaces.

Removal of Paint, Marking Pens, or Labels

- Butyl cellosolve works well for removal of paints, marking pen inks, lipstick, etc.
- Labels, stickers, etc. may be removed using kerosene. When the solvent will not penetrate sticker material, apply heat (hair dryer) to soften the adhesive and promote removal. GASOLINE SHOULD NOT BE USED.

16. Warranty

What is Covered

This Life Fitness commercial exercise equipment product is warranted to be free of all defects in material and workmanship.

Who is Covered

The original purchaser or any person receiving the product as a gift from the original purchaser.

Who Pays Transportation and Insurance For Service

If the Product or any covered part must be returned to a service facility for repairs, We, Life Fitness, will pay all transportation and insurance charges for the first year. You are responsible for transportation and insurance charge after the first year.

What We Will Do To Correct Covered Defects

We will ship to you any new or rebuilt replacement part or component, or at our option, replace the Product. Such replacement parts are warranted for the remaining portion of the original warranty period.

What is Not Covered

Any failures or damage caused by unauthorized service, misuse, accident, negligence, improper assembly or installation, debris resulting from any construction activities in the Product's environment, rust or corrosion as a result of the Product's location, alterations or modifications without our written authorization, or by failure on your part to use, operate and maintain the Product as set out in your Operation Manual.

All terms of this warranty are void if this product is moved beyond the continental borders of the United States of America (excluding Alaska, Hawaii and Canada) and are then subject to the terms provided by that country's local authorized Life Fitness representative.

Owner's Manual

It is VERY IMPORTANT THAT YOU READ THIS MANUAL before operating the Product. Remember to perform the periodic maintenance requirements specified in the Manual to assure proper operation and your continued satisfaction.

Exclusive Warranty

THIS LIMITED WARRANTY IS IN LIEU OF ALL OTHER WARRANTIES OF ANY KIND EITHER EXPRESSED OR IMPLIED, INCLUDING BUT NOT LIMITED TO THE IMPLIED WARRANTIES OF MERCHANTABILITY AND FITNESS FOR A PARTICULAR PURPOSE, AND ALL OTHER OBLIGATIONS OR LIABILITIES ON OUR PART. We neither assume nor authorize any person to assure for us any other obligation or liability concerning the sale of this Product. Under no circumstances shall we be liable under this warranty, or otherwise, of any damage to any person or property, including any lost profits or lost savings, for any special, indirect, secondary, incidental or consequential damages of any nature arising out of the use of or inability to use this Product. Some states do not allow the exclusion or limitation of implied warranties or of liability for incidental or consequential damages, so the above limitations or exclusions may not apply to you. Warranty coverages and terms may differ outside the United States. Please contact the Life Fitness office servicing your country (contact information found at the front of this manual) or visit the applicable local Life Fitness website to receive the specific warranty information for your country.

Changes in Warranty Not Authorized

No one is authorized to change, modify or extend the terms of this limited warranty.

Effects of State Laws

This warranty gives you specific legal rights, and you may have other rights which vary from state to state and country by country.

Terms of Warranty Coverage

Please use the link below to access component warranty terms:

http://lifefitness.com/warranties

17. Cable Handling Guide

Cable Terminations, Tensioning and Wear Guide

Cable connections with threaded cable ends are required to be installed and maintained following the specifications identified below. Failure to follow these specifications can lead to the dislocation of the threaded cable during use and can cause serious injury. Along with securing the threaded cable end and jam nut, it is important to check the entire unit and ensure that all hardware is securely fastened and not left loose upon completion of cable installation.

⚠ **WARNING:** Use of non certified "techs" note: Service warranties may be void if a non-Life Fitness-certified technician performs service work. Replacement of any strength cables should be performed by a Life Fitness certified technician.

Cable Terminations

1. Cable must be threaded at least ½ inch (12.7mm) into termination points; at headplate (A) and frame/carriage (B).

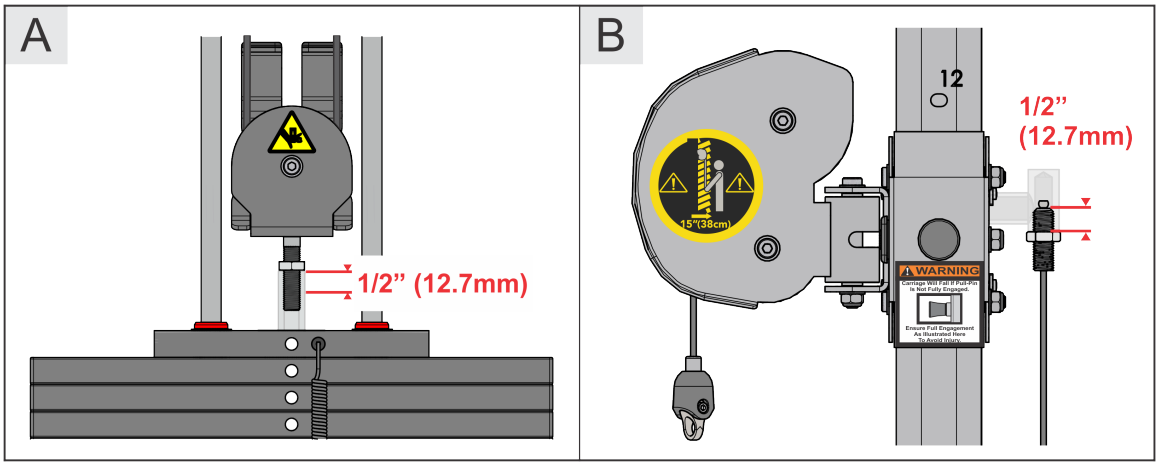

2. Certain models are now equipped with a bayonet portal to assist checking proper thread engagement. To do so, attempt to pass a 7mm Allen wrench through the portal, if it goes through, more threads are needed to meet the minimum requirement.

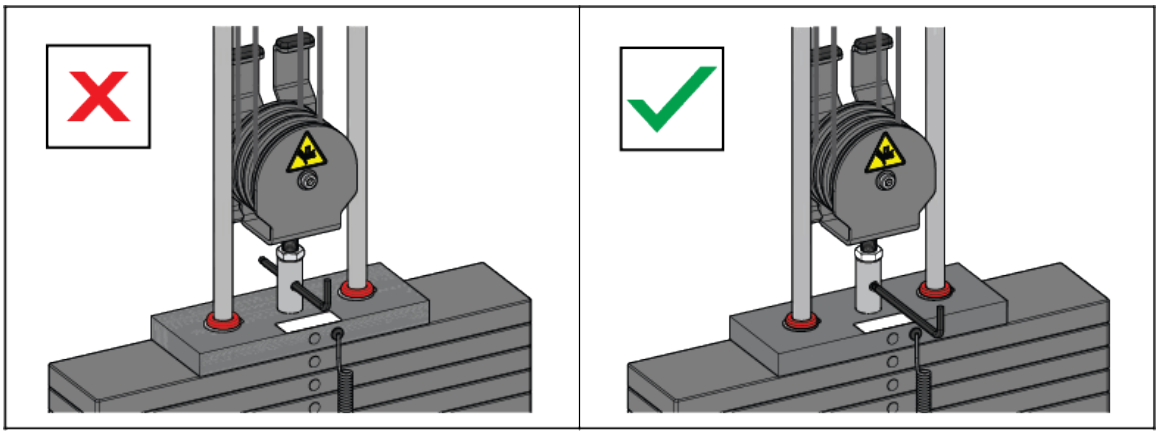

3. When proper thread engagement is reached, tighten jam nut to 20-25 FT-LBS (27.2 - 34.0 Nm) using a 24mm wrench.

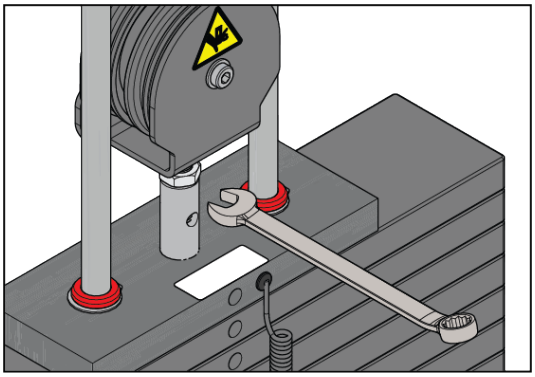

Tensioning Cable

Cable should have enough tension so it stays seated into the pulley but not so tight that it pulls the head plate off the weight plate below it.

1. If the head plate has lifted, loosen the jam nuts at the terminations and loosen the threaded plugs a half turn until the head plate comes to rest on the weight plate below. Check that the cable's threaded plugs are engaged at least 1/2" (12.7mm) at each termination point.

SEATED HEAD PLATE	SUSPENDED HEAD PLATE
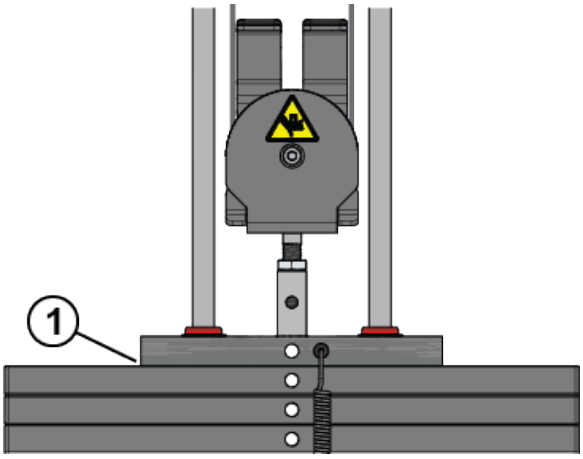	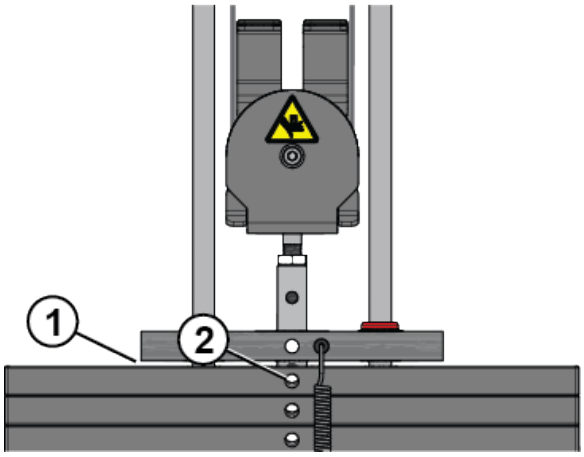
1. No gap	**1.** Gap **2.** Bayonet obstructing weight stack pin

2. Ensure that the weight stack selector pin can fully engage into each weight plate.

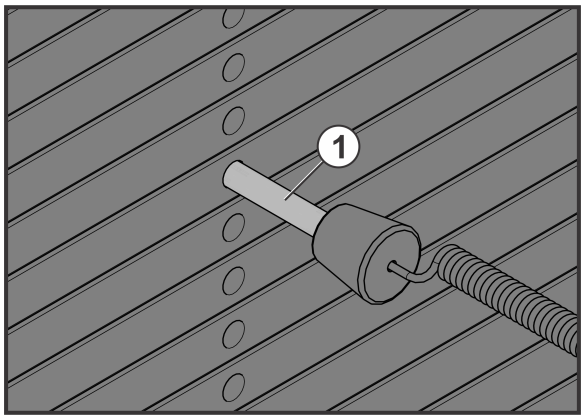

Item	Description	Qty.
1	Weight Stack Selector Pin	1

3. When proper thread engagement is reached, tighten jam nut to 20-25 FT-LBS (27.2 - 34.0 Nm) using a 24mm wrench.

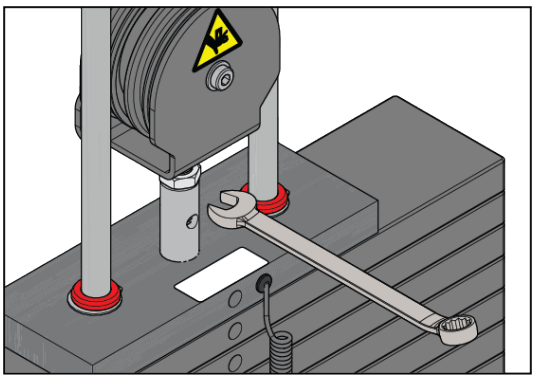

Strength Cable Wear Guide

Replace cable at first sign of any of the following:

FRACTURES:

Casing can crack or fracture under strains during use. Any crack in the casing merits cable replacement even if no wire rope is exposed.	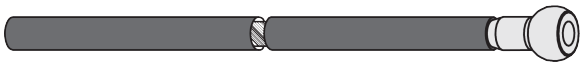
Be especially observant for fractures near the components on the cable assembly - IE. Nylon Ball, Nico Loop, Threaded Plug, etc.	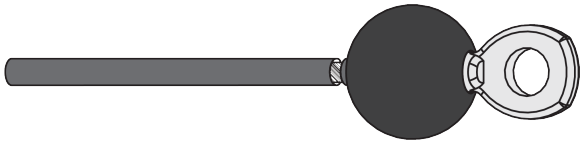

TWISTING/BINDING:

Inspect casing to ensure wire rope is not twisting within its casing. Any sign of the cable twisting should be replaced immediately.	

BULGING:

Internal wire rope strands can break within and coil causing a bulge to appear. Cable should retain same outside diameter throughout.	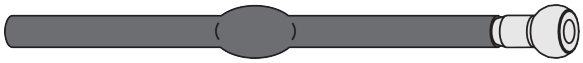

FRAYED/EXPOSED WIRE ROPE:

Any exposed wire rope protruding through the casing or at either end.	

FLATTENED:

Section of cable is compressed and will not retain its shape (outside diameter).	

PERMANENTLY BENT:

Cable has 'kink' and prohibits cable from laying straight. Wire rope may be unraveling beneath casing and is compromised warranting replacement.	

ENDS SEPARATING:

Watch for component end of cable to pull away from cable assembly - look for exposed wire rope.	

Insert Inspection

Inspect insert within the strain-relief cable end assembly and replace if any sign of damage.

1. Check around plastic insert and the plastic housing for any excessive wear or damage.

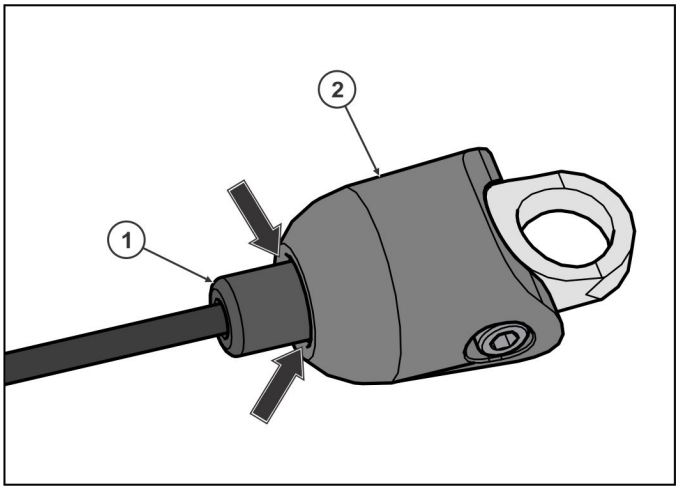

Item	Description	Qty.
1	Plastic Insert	1
2	Plastic Housing	1

2. Replace plastic insert if cracked, torn, separated, overly worn or damaged in any way.

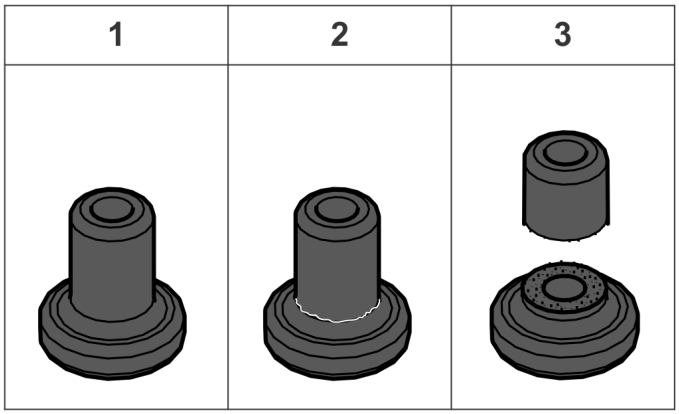

Item	Description	Status
1	Insert - No damage	Use
2	Insert - Cracked	Replace
3	Insert - Separated	Replace

3. Using a 4mm hex wrench, remove screws from the housing/link and the damaged insert from cable assembly. Replace damaged insert, reassemble components and **tighten to 8-10 in-lbs (0.9-1.1 Nm).**

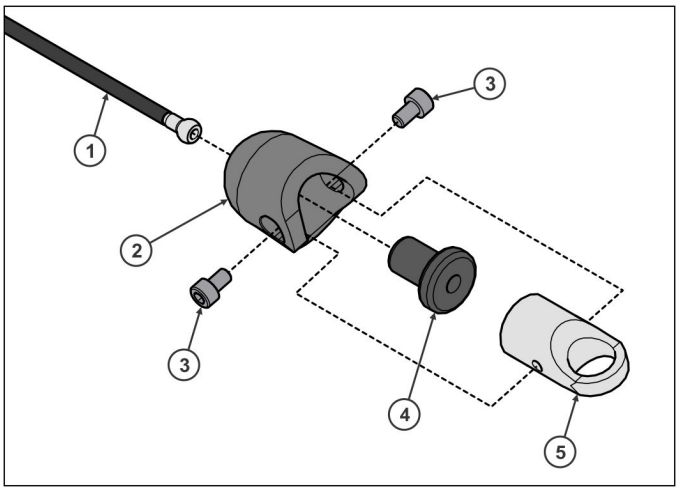

Item	Description	Qty.
1	Cable Assembly	1
2	Housing	1
3	Screw; M5 X 0.8 HXS SOC	2
4	Insert	1
5	Link	1

18. Bolt to Floor Guide

Introduction

Life Fitness designs its products to be stable when used as designed. Because strength training is dynamic, we cannot predict how users will ultimately use the products in all circumstances. Therefore, Life Fitness requires that strength training equipment be secured to a solid, level surface to stabilize and eliminate rocking or tipping over. SYNRGY units equipped with the AFS freestanding system are **recommended** to be secured, but not **required**.

Unit	Recommended Bolt to Floor	Required Bolt to Floor
SYNRGY Functional Training:		
- Add Functional (SYN-AF)		●
- Core Functional/Cable (SYN-CFC)		●
- Core Functional/Functional (SYN-CFF)		●
SYNRGY Cable Training:		
- Add Cable (SYN-AC)	●	
- Core Cable/Cable (SYN-CCC)	●	
SYNRGY Functional Training connected to:		
- Back-to-Back Ballast (SYN-BB)	●	
- Freestanding System (SYN-FS)	●	
- Monkey Bar, 4ft Add (SYN-MB4A)	●	
- Monkey Bar, 4ft Core (SYN-MB4C)	●	
- Monkey Bar, 6ft Add (SYN-MB6A)	●	
- Monkey Bar, 6ft Core (SYN-MB6C)	●	
SYNRGY Accessory Storage Units:		
- Accessory Storage Add (SYN-A)	●	
- Accessory Storage Core (SYN-C)	●	

Each new unit shipped comes with a multi-language hangtag stating the importance of bolting the unit down as a safety precaution.

It is the facility's responsibility to adhere to local and regional building codes.

SYN Bolt to Floor Example

- Both the Functional and Cable side frames in SYN-CFC (Item 2) are required to be anchored to the floor.
- The Functional side frame in SYN-AF (Item 5) is required to be anchored to the floor, unless a Freestanding System is used (Item 4).

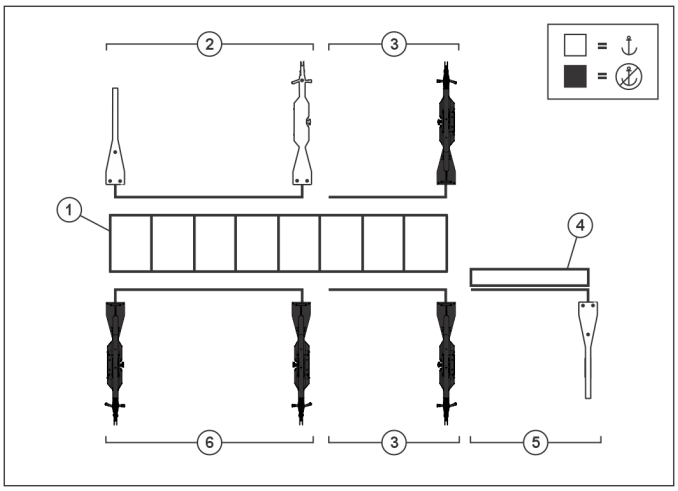

Item	Description	Qty.
1	Monkey Bars (SYN-MB)	1
2	Core Functional/Cable (SYN-CFC)	1
3	Add Cable (SYN-AC)	2
4	Freestanding System (SYN-FS)	1
5	Add Functional (SYN-AF)	1
6	Core Cable/Cable (SYN-CCC)	1

NOTE: White side frames are required to be anchored. Black side frames are recommended to be anchored.

Delivery and Installation Tips

All Anchors

- Fasteners must have minimum embedment in concrete floor, not including screed, regardless of wood/tile/rubber over sub-floor. (See *Anchor Types* for maximum sub-floor thickness between unit and concrete to equipment foot must be made of flooring or other material (i.e. no air gaps)).
- DO NOT reuse fasteners. Static and Dynamic anchors are designed for one-time use only.
- Factor in equipment's feet height when selecting fastener length.
- Factor in flooring thickness when selecting fastener length.
- It is also recommended to drill an additional 1/2" (12.7 mm) of depth beyond the length of the fastener being used to ensure that debris does not block the entry of the anchor.
- Minimum concrete compressive strength: 3000 psi (20 N/mm2).

Anchoring

- All anchors must have a minimum embedment into concrete, regardless of wood/tile/rubber/screed over sub-floor.
- Dynamic anchors must have a minimum embedment depth in concrete to ensure maximum security and pull out force. See *Anchor Types* for embedment depth minimums.

Building Codes

It is the facility's responsibility to adhere to local and regional building codes. Please verify with the customer to ensure that they are aware of this.

Carpeting

If bolted down to carpet flooring, be sure to use a box cutter knife to cut the carpet threads around each foot. This will help avoid the carpet threads from being wrapped around and pulled by the drill bit.

Competitor Product

The bolt down guidelines and procedures for Life Fitness products were determined by the company's Engineering and Installation Development groups. These guidelines include which anchors to use and positioning of the anchors are required for Life Fitness product.

- Life Fitness does not have that level of specification or engineering input for competitive product.
- Life Fitness installation teams are not permitted to anchor competitor equipment.

Drilling

It is also recommended to drill an additional 1/2" (12.7 mm) of depth beyond the length of the fastener being used to ensure that debris does not block the entry of the anchor.

- This can be done by marking your drill bit with a piece of tape.

- While it is recommended that a vacuum be used to clean up debris, this will not account for all the debris that will settle at the bottom of the drilled hole.

Anchor Type - Dynamic

Dynamic Anchor	Standard Sizes	Drill Bit Size
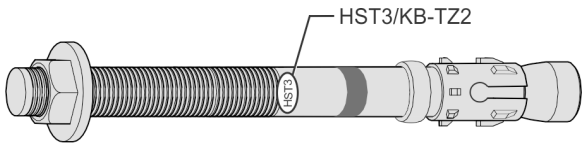	Imperial: KB-TZ2 3/8" x 5"	3/8in
	Metric: HST3 10mm x 130mm	10mm

Anchor Specifications

1	2	3	4	5	6
Dynamic Anchor	**Minimum Concrete Thickness**	**Minimum Anchor Embedment into Concrete**	**Minimum Drill Depth in Concrete Beyond Anchor**	**Minimum Distance from Anchor to Concrete Edge or Seam:**	**Maximum Flooring (wood/tile/ rubber/screed) Thickness Between Base Plate and Concrete**
KB-TZ2 3/8" x 5"	4″	2-1/2"	1/2"	1-3/4″	0″ - 0.92″
HST3 10mm x 130mm	100mm	68mm	12mm	44mm	(0mm - 26mm)

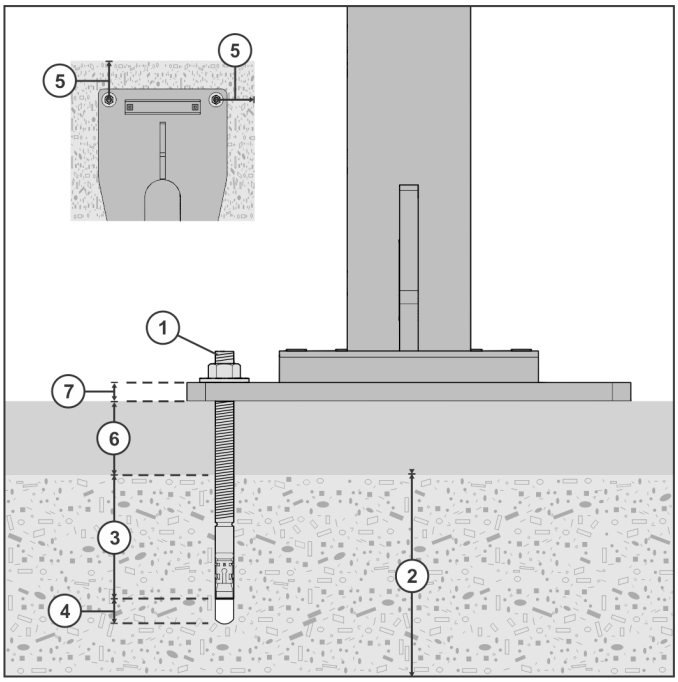

Item	Description
1	Anchor
2	Concrete Thickness
3	Anchor Embedment into Concrete Thickness
4	Drill Depth Beyond Anchor Thickness
5	Distance of Anchor to Concrete Edge
6	Flooring (wood/tile/rubber/screed) Thickness
7	Base Plate Thickness (See Foot Dimensions)

Pullout Force

Life Fitness specifies Hilti™ static and dynamic anchors. According to the anchor manufacturer, the recommended design pullout force (in tension) for the specified anchors, when properly installed in cracked concrete, is provided in the side table. This table should be used for reference only; for additional and up-to-date information on the anchor capabilities or the design pullout force in other substrates, please consult Hilti directly at https://www.us.hilti.com.

Dynamic Anchors	Design Resistance in Tension *
KB-TZ2 3/8" x 5″ and HST3 10mm x 130mm	Greater than 2,000 lb (2.7kN)

Static Anchors	Design Resistance in Tension *
KH-EZ 1/4″	830 lb (3.6 kN)

Static Anchors	Design Resistance in Tension *
HUS-H 6mm	3.3 kN (741lb)

** Design strength extracted from the Hilti™ Anchor Fastening Technology Manual.*

Tools Required

⚠ **WARNING:** Adhere to manufacturer's equipment warnings and guidelines. Follow manufacturer's instructions for proper usage.

- 1″ L-shape SDS rotary hammer
- (Imperial anchors) 3/8" diameter carbide drill bit
- (Metric anchors) 10mm diameter carbide drill bit
- Extension cord
- Floor scanner / rebar detector (optional)
- Hammer (Dynamic anchors only)
- Rotary tool
- Safety glasses
- Tape measure
- Torque wrench
- Vacuum (for debris)

Anchor Procedure

1. Place unit into position to be mounted and cycle unit to set its stance.
2. Wearing protective glasses, drill down into flooring perpendicularly to the required depth, ensuring that the foot thickness of the unit is being accounted for; refer to *Anchor Specifications* and *Foot Dimensions*.

   NOTE: Use 3/8" size bit for Imperial anchors and 10mm for Metric anchors.

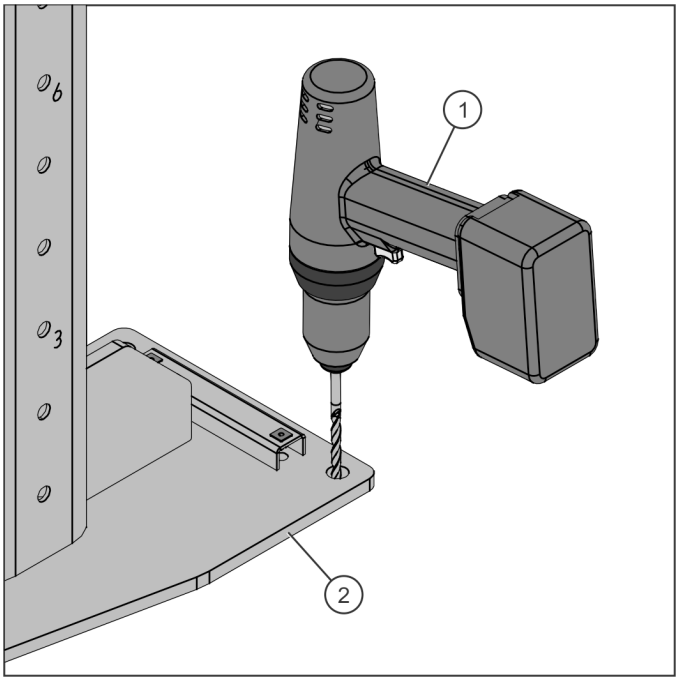

Item	Description	Qty.
1	Drill with Concrete Bit	1
2	Upright	1

3. Clear out debris from hole.
4. **NOTE: This step only applies to dynamic anchors. Do not hammer static anchors.**

   Insert anchor assembly and hammer until flush against upright's base plate.

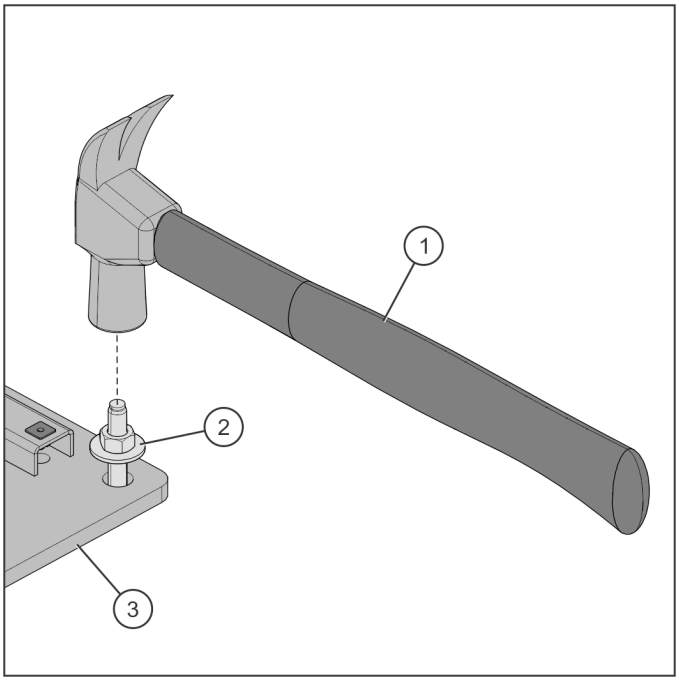

Item	Description	Qty.
1	Hammer	1
2	Anchor Assembly	1
3	Base Plate	1

5. Tighten to 30 foot-pounds for Imperial (45Nm for Metric), assuring there are at least 3 threads left exposed.

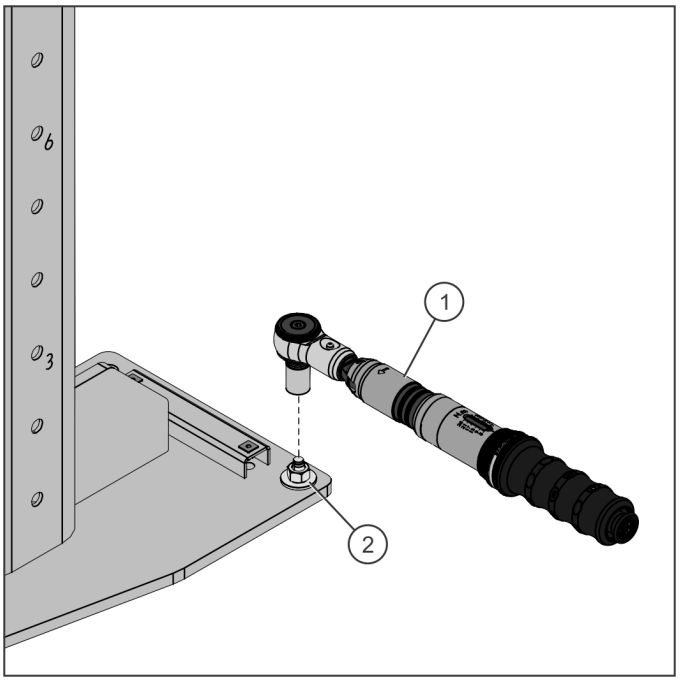

Item	Description	Qty.
1	Torque Wrench	1
2	Anchor Assembly	1

6. If necessary, cut extra length from top of anchor with a rotary tool leaving proper concrete engagement, torque requirements and at least 3 exposed threads.

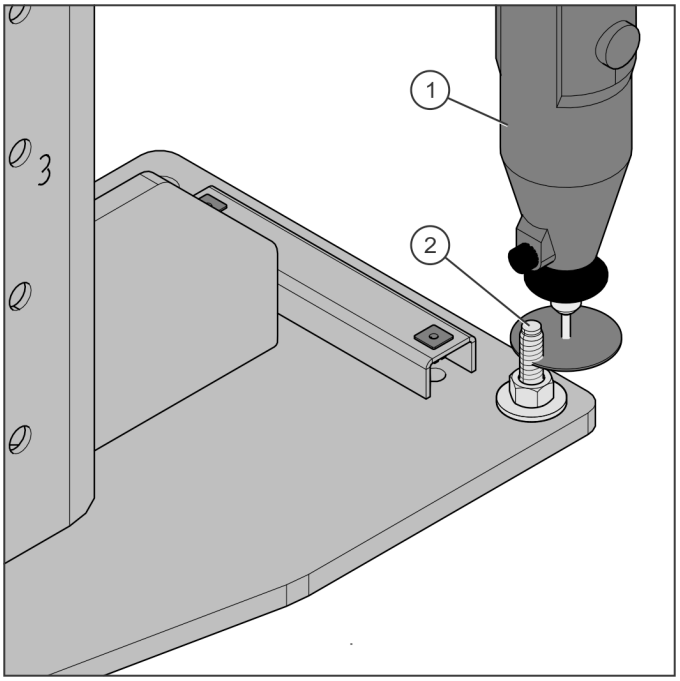

Item	Description	Qty.
1	Rotary Tool	1
2	Anchor Assembly	1

7. **Check anchors weekly and re-tighten to 30 Foot-Pounds for Imperial (45Nm for Metric) if needed. Failure to do so may jeopardize anchor effectiveness.**

Foot Dimensions

Use below image to determine foot specifications.

Cable Side Frame - Front:

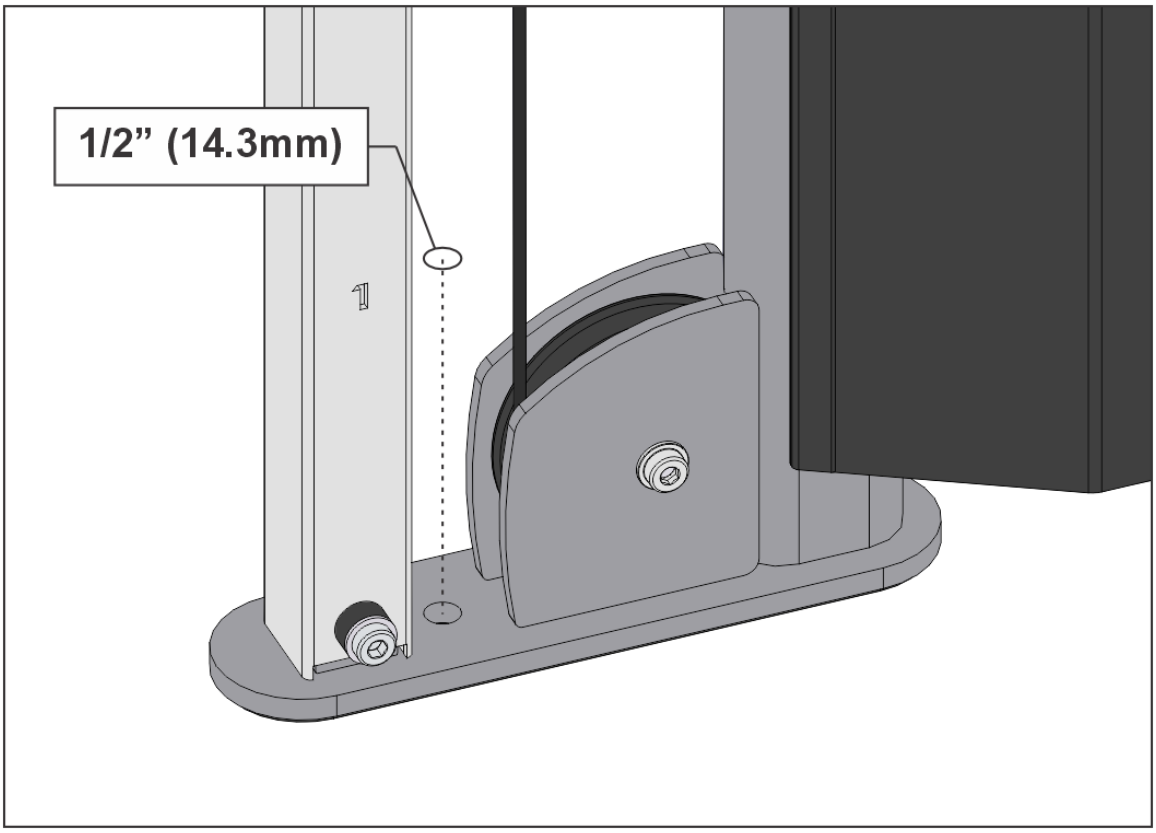

Cable Side Frame - Rear:

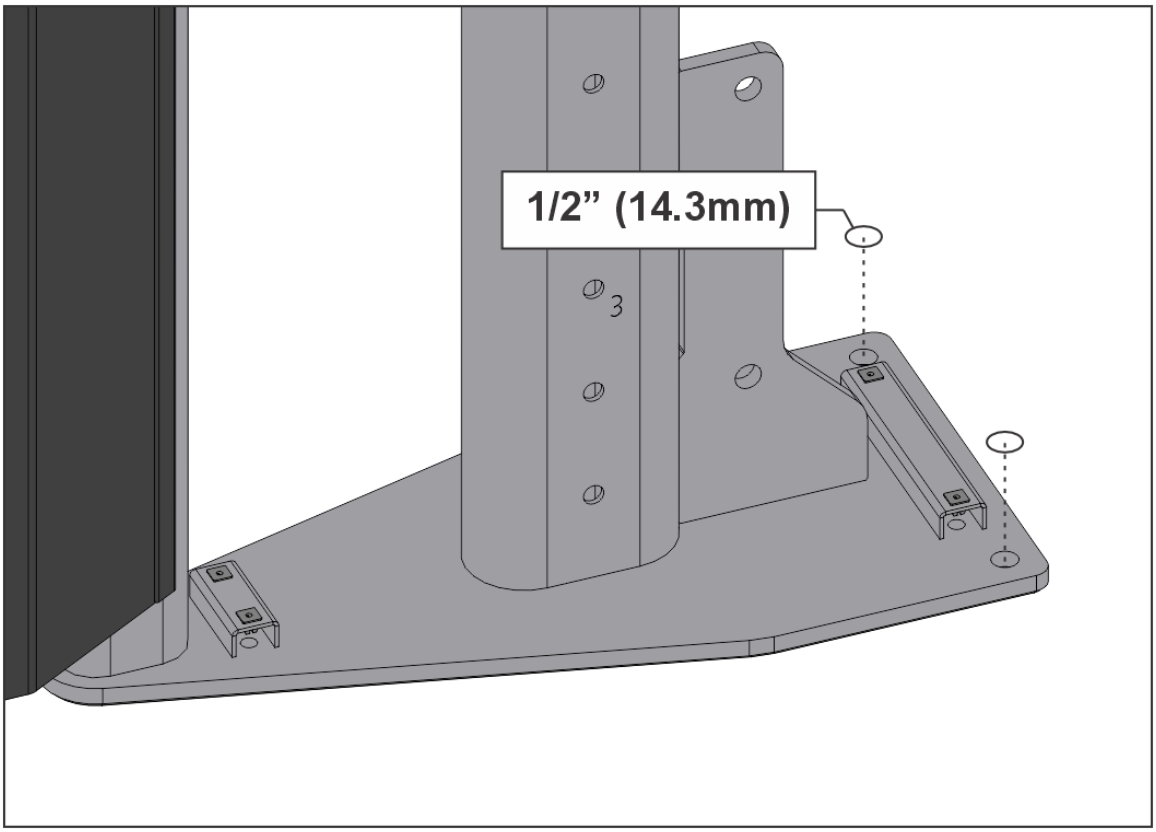

Functional Side Frame:

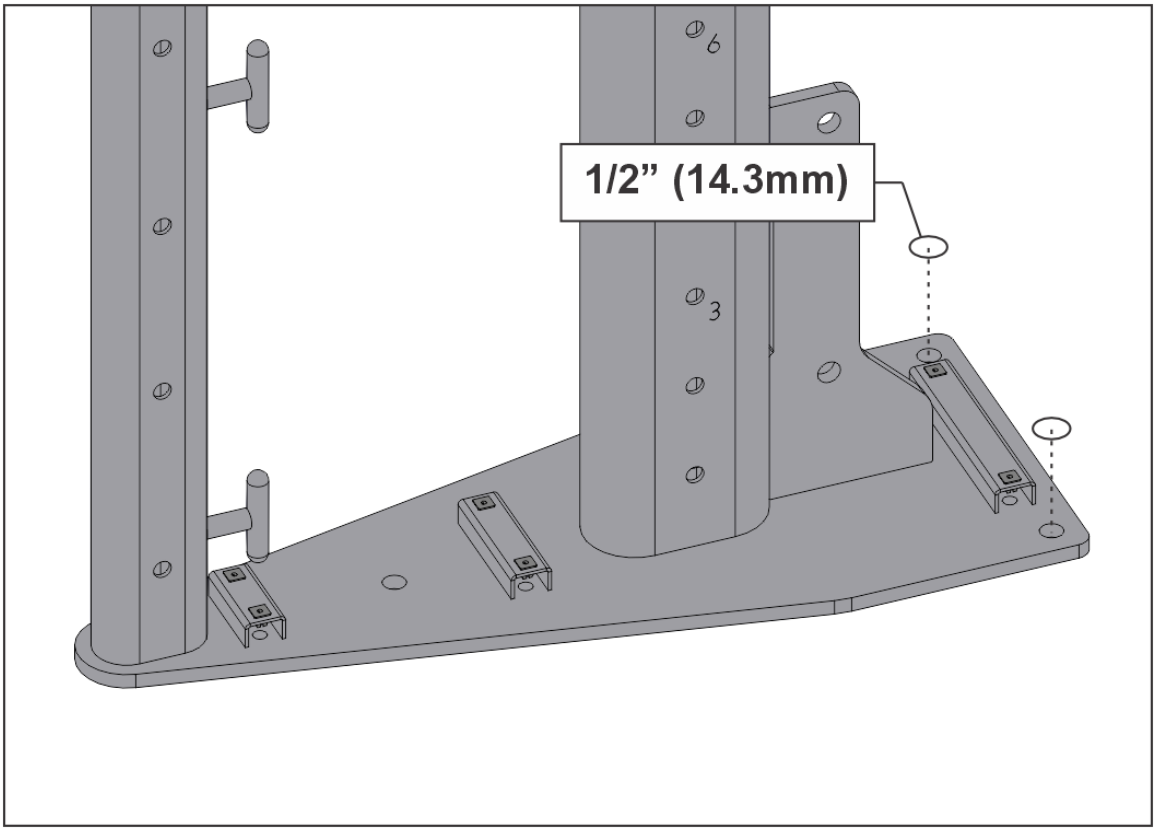

NOTE: Plate thicknesses: 3/8" (9.52mm)

1030073-0001